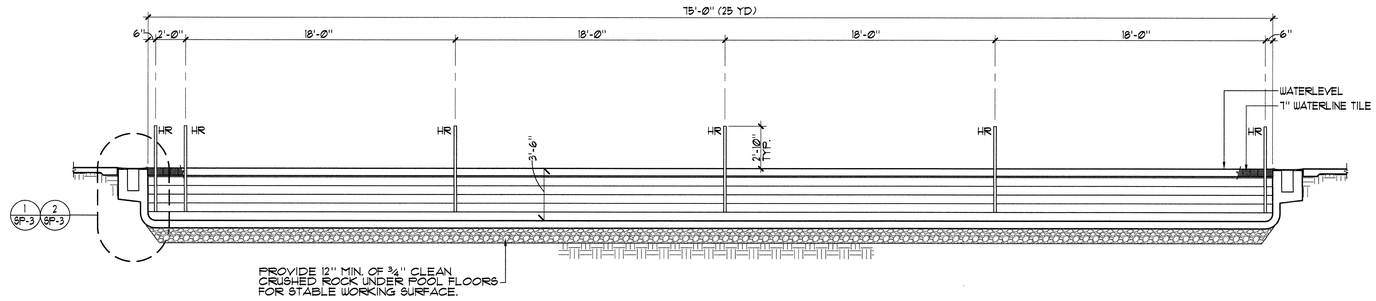

A **SWIMMING POOL SECTION** ¼"=1'-0"

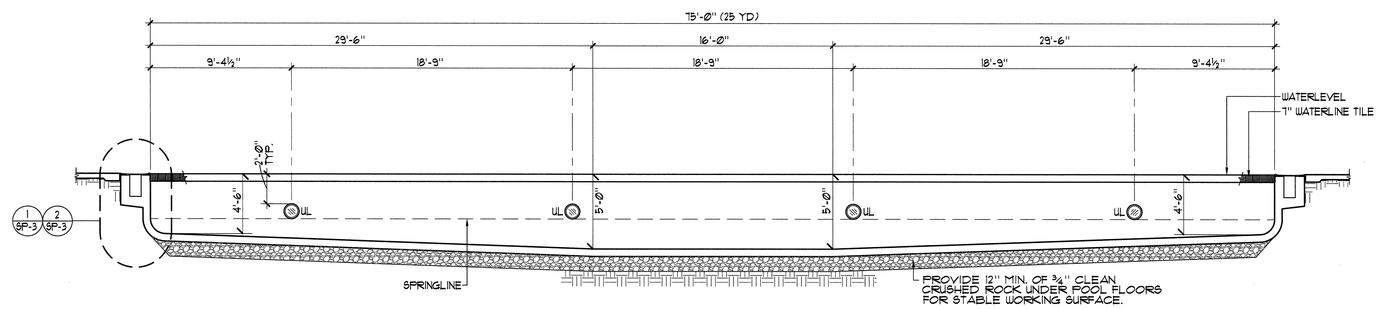

B **SWIMMING POOL SECTION** ¼"=1'-0"

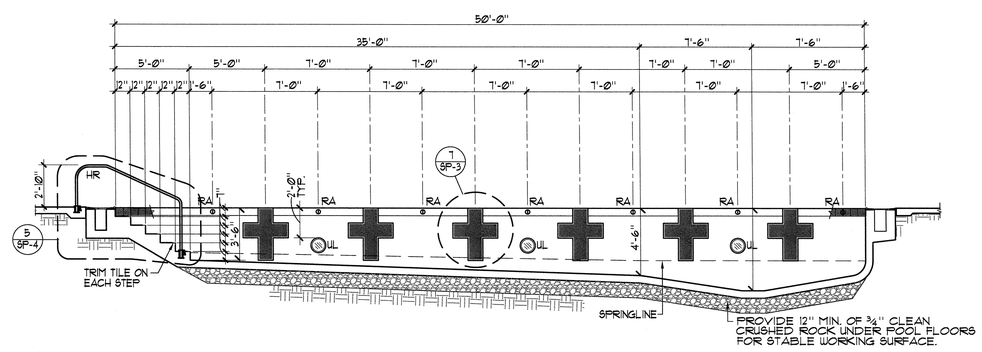

C **SWIMMING POOL SECTION** ¼"=1'-0"

AQUATIC DESIGN GROUP
2231 PARKWAY AVE, CARLSBAD, CA 92008
Tel 760.438.8400 Fax 760.438.5351

McCARTHY
LPA
KH

McCarthy Building Companies, Inc
343 Sansome Street, 14th Floor
San Francisco, California 94104
P 415 364-1339
F 415 397-5999

LICENSED ARCHITECT
STEVEN C. KENDRICK
No. C14099
REN. 09-30-07
STATE OF CALIFORNIA

LICENSED ARCHITECT
ROBERT J. FERRIS
C-18922
REN. 12/31/09
STATE OF CALIFORNIA

IDENTIFICATION STAMP
DIV. OF THE STATE ARCHITECT
OFFICE OF REGULATION SERVICE
APPL. #: 01-110097
ACI
DATE
FLS
APR 09 2009

FILE NUMBER: 41-C1

This and all other project documents and all ideas, aesthetics and designs incorporated therein are instruments of service. All project documents are the registered property of LPA, INC. (LPA) and cannot be lawfully used in whole or in part for any project or purpose except as described in the contractual agreement between LPA and Client. LPA hereby gives formal notice that any other use, reproduction, publication or modification (misuse) is not only unlawful but automatically binds all parties involved with misuse to fully indemnify and defend LPA and LPA's Consultants to the maximum legal extent against all losses, demands, claims or liabilities arising directly or indirectly from project document misuse.

Project documents describe design intent of work and are not a representation of as-built or existing conditions. LPA and LPA's Consultants make no representations concerning the accuracy of documents and are not responsible for any discrepancies between project documents and the existing conditions.

© Copyright 2008

College of San Mateo
Site Package
San Mateo, CA

Developed for
San Mateo County Community College District

Revision Description	Date

Revision Description	Date
DSA SUBMITTAL	19 SEPT 2008
DSA FINAL	09 APRIL 2009

Job. No.	27082.30
Date	09 APRIL 2009
Drawn by	NFC
Checked by	SJF
Scale	1/4"=1'-0"

SWIMMING POOL SECTIONS

SP-2