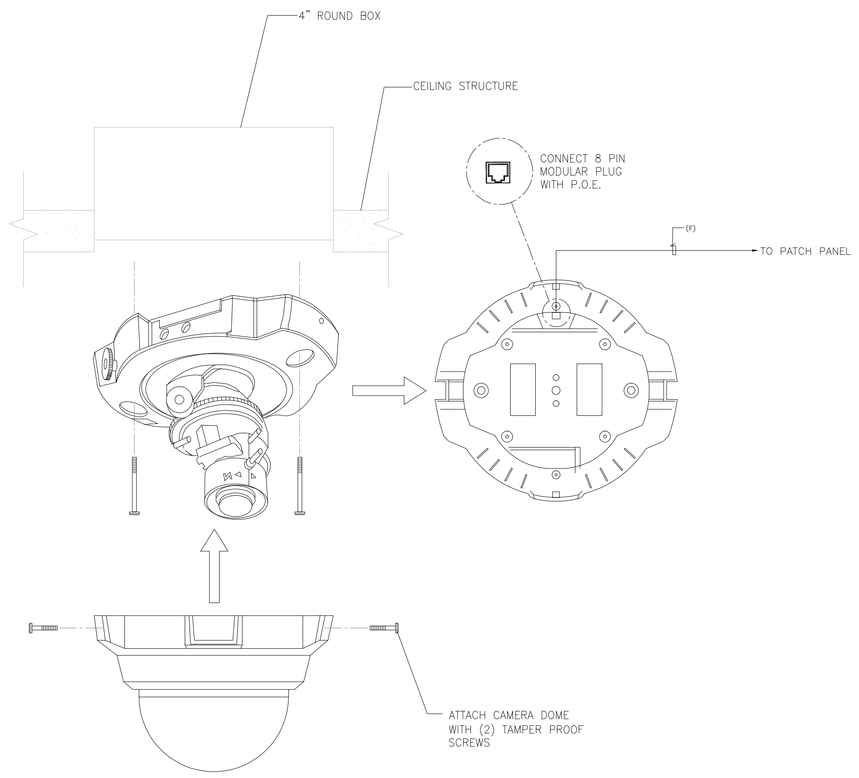

A AXIS 216FD-V, SURFACE CEILING MOUNTED
SCALE: N.T.S.

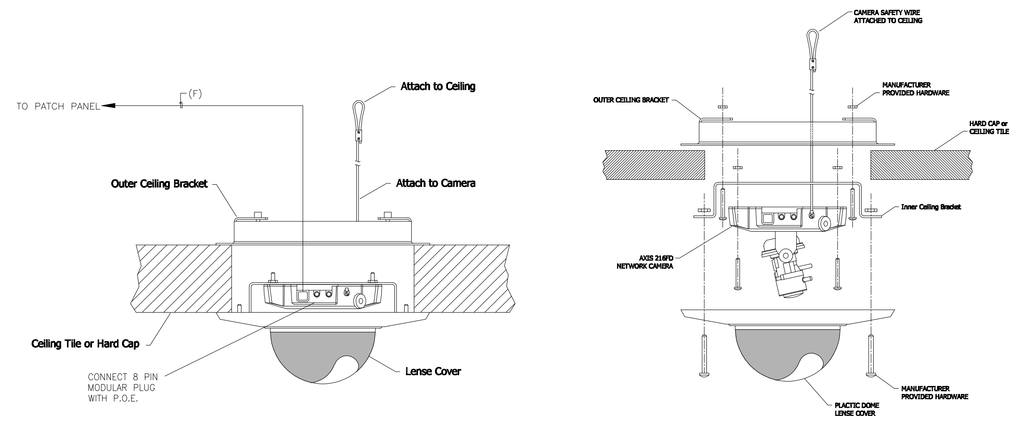

B AXIS 216FD, RECESSED CEILING MOUNTED
SCALE: N.T.S.

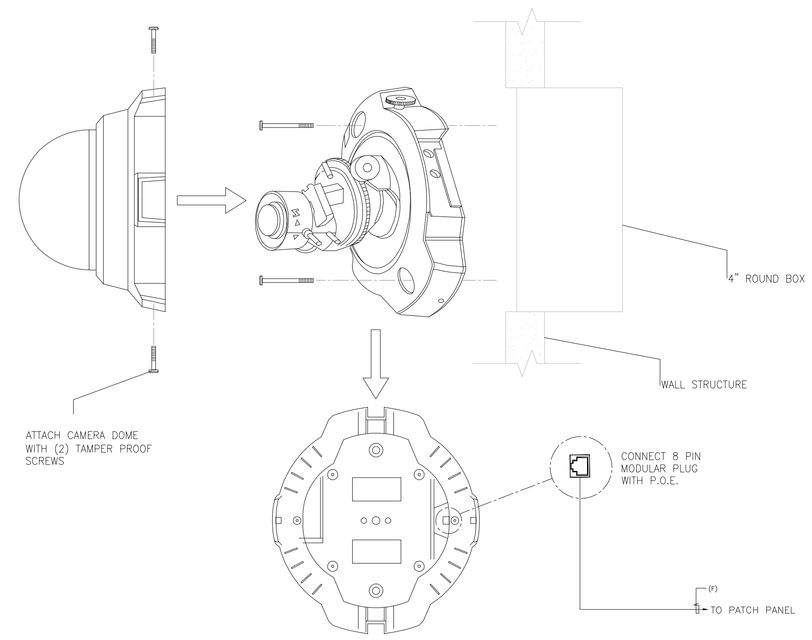

C AXIS 216FD-V, SURFACE WALL MOUNTED
SCALE: N.T.S.

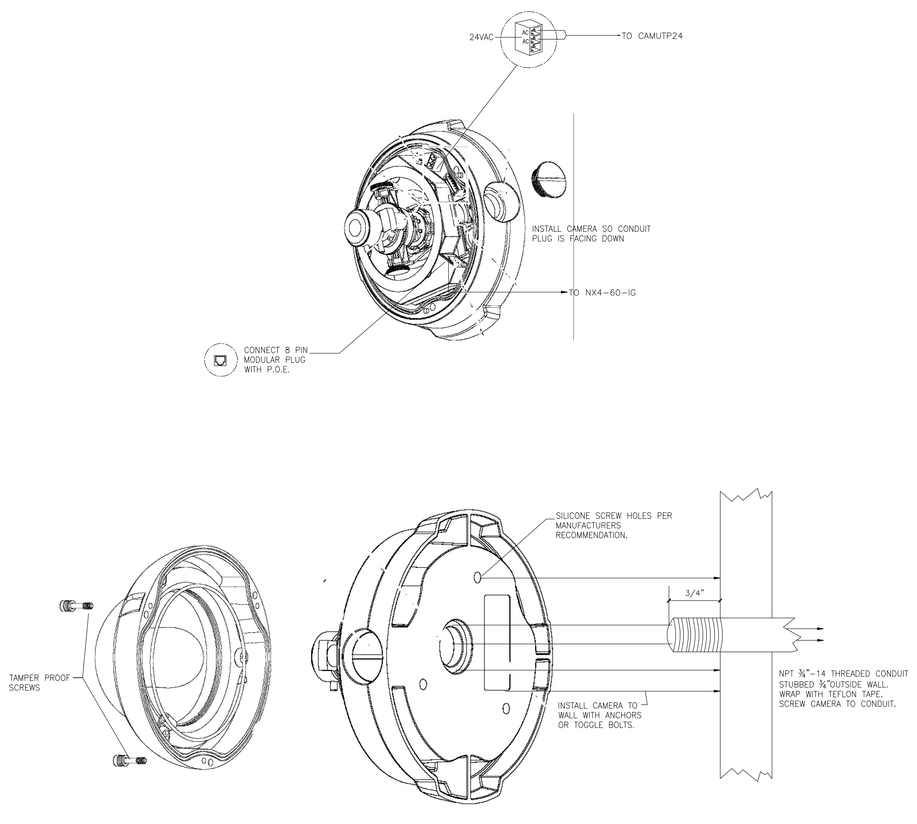

D AXIS 225FD, SURFACE WALL MOUNTED
SCALE: N.T.S.

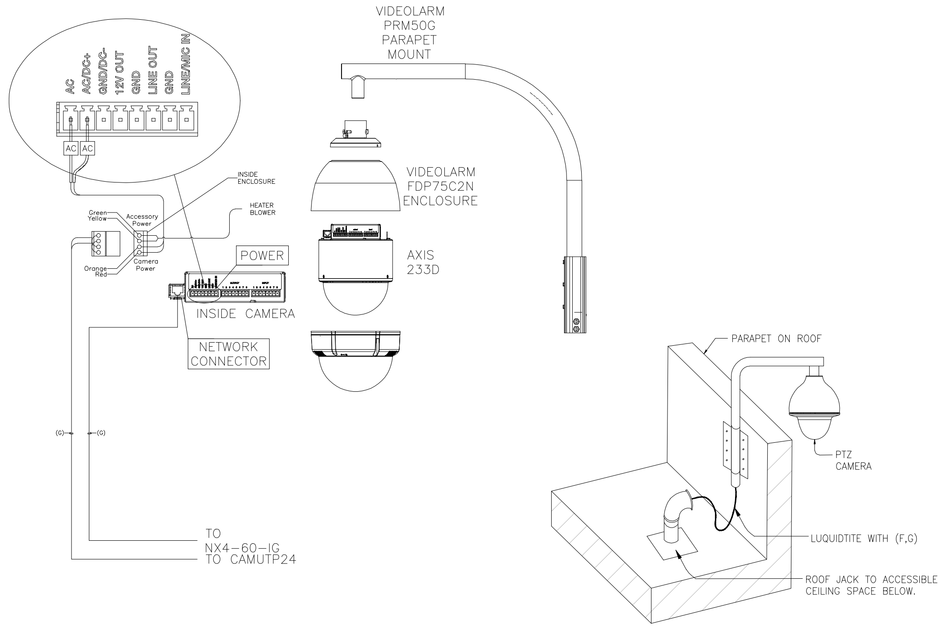

E AXIS 233D, PARAPET MOUNTED
SCALE: N.T.S.

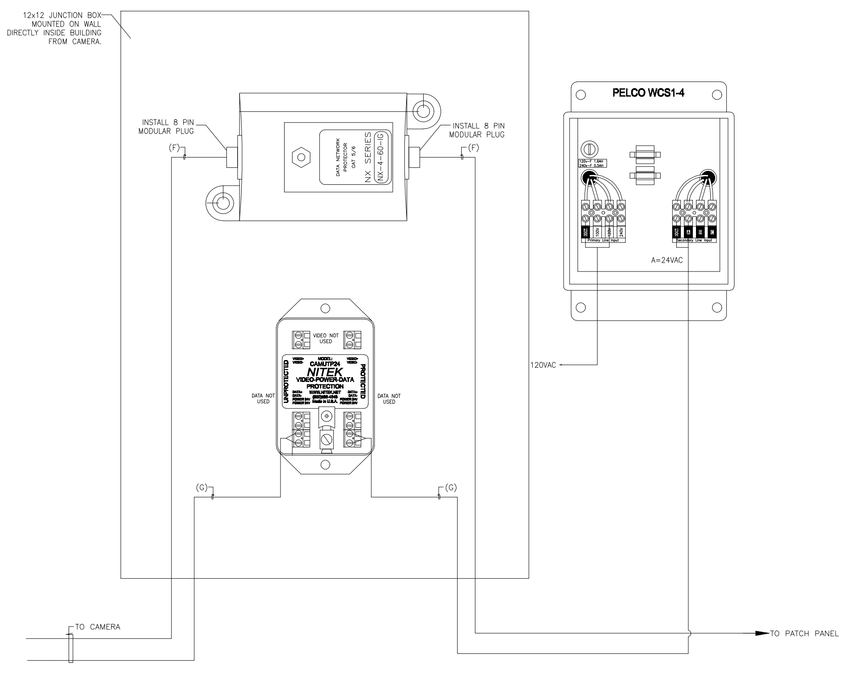

F LIGHTNING PROTECTORS AND POWER SUPPLY
SCALE: N.T.S.

WRNS STUDIO LLP
501 SECOND STREET
4TH FLOOR, STE. 402
SAN FRANCISCO
CALIFORNIA 94107
415.489.2224 TEL
415.358.9100 FAX
WWW.WRNSSTUDIO.COM

NETVERSANT
Inspiring Technology Solutions

NO.	ISSUES/REVISIONS	DATE
1	100% SCHEMATIC DESIGN SUBMITTAL	04/28/08
2	50% DESIGN DEVELOPMENT SUBMITTAL	06/13/08
3	100% DESIGN DEVELOPMENT SUBMITTAL	07/28/08
4	DSA INCREMENT #1: SITE DEMOLITION, EXCAVATION, ROUGH GRADING & UTILITIES	09/25/08
5	INCREMENT 2 80% REVIEW	10/10/08
6	DSA INCREMENT #2: STRUCTURE & GFRC PANELS	11/11/08
7	DSA INCREMENT #3 50% REVIEW	11/11/08
8	DSA INCREMENT #1: BACK CHECK	11/19/08
9	DSA INCREMENT #3: 90% REVIEW	12/19/08
10	DSA INCREMENT #3: TENANT IMPROVEMENT & ROOFING SYSTEM	02/09/09
11	DSA INCREMENT #2: BACKCHECK	03/11/09
12	DSA INCREMENT #3: BACKCHECK	05/12/09
13	PROJECT RECORD SET	01/31/11

PROJECT RECORD SET

SKYLINE COLLEGE CIP2 DESIGN-BUILD BUILDING 4N
KEYPLAN

PROJECT NO.: 07012.00 DRAWN BY: ML
DATE: 01/31/11 CHECKED BY: CM/CG
SCALE: AS NOTED

SHEET TITLE:

CCTV DETAILS

SHEET NO:
SEC-3.04

All drawings and written material appearing herein constitute original and unpublished work of the Architect/Engineer and may not be duplicated, used or disclosed without consent of Architect/Engineer.

If this drawing is not 30"x42", then the drawing has been revised from its original size. Noted scales must be adjusted. This line should be equal to one inch