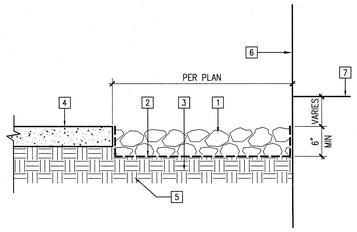

1. COBBLE 1 1/2" TO 2 1/2" DIA. GREY COLOR SAMPLE TO BE SUBMITTED AND APPROVED BY LANDSCAPE ARCHITECT PRIOR TO INSTALLATION.
2. SOIL SEPARATOR FILTER FABRIC 'MIRAFI' 140N
3. 3/4" DRAIN ROCK WHERE DRAIN LINE OCCURS, SEE CIVIL PLAN
4. CONCRETE PAVING OR CONCRETE MOW BAND SEE LAYOUT AND MATERIALS PLAN (01 / L4.01) (06 / L4.01)
5. BASE MATERIAL AND COMPACTED SUBGRADE PER GEOTECHNICAL REPORT.
6. FACE OF BUILDING
7. FINISH FLOOR ELEVATION. SEE GRADING PLAN.

GRAVEL MULCH | 1" = 1'-0" | CBBL MULCH | 17

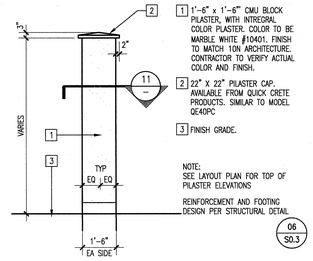

1. 1'-6" x 1'-6" CMU BLOCK PILASTER, WITH INTREGRAL COLOR PLASTER. COLOR TO BE MARBLE WHITE #10401. FINISH TO MATCH 10N ARCHITECTURE. CONTRACTOR TO VERIFY ACTUAL COLOR AND FINISH.
2. 22" X 22" PILASTER CAP. AVAILABLE FROM QUICK CRETE PRODUCTS. SIMILAR TO MODEL QE40PC
3. FINISH GRADE.

NOTE:
SEE LAYOUT PLAN FOR TOP OF PILASTER ELEVATIONS

REINFORCEMENT AND FOOTING DESIGN PER STRUCTURAL DETAIL (06 / S0.3)

PILASTER WITH CAP | 3/8" = 1'-0" | DT02WD01X | 13

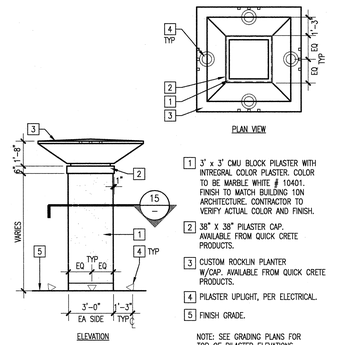

1. 3' x 3' CMU BLOCK PILASTER WITH INTREGRAL COLOR PLASTER. COLOR TO BE MARBLE WHITE # 10401. FINISH TO MATCH BUILDING 10N ARCHITECTURE. CONTRACTOR TO VERIFY ACTUAL COLOR AND FINISH.
2. 38" X 38" PILASTER CAP. AVAILABLE FROM QUICK CRETE PRODUCTS.
3. CUSTOM ROCKLIN PLANTER W/CAP. AVAILABLE FROM QUICK CRETE PRODUCTS.
4. PILASTER UPLIGHT, PER ELECTRICAL.
5. FINISH GRADE.

NOTE: SEE GRADING PLANS FOR TOP OF PILASTER ELEVATIONS

PILASTER WITH CAP AND FINIAL | 1/4" = 1'-0" | DT02WD02 | 09

1. INTERNAL HALYARD GROUND SET FLAG POLE REFER TO SITE FURNISHINGS LEGEND.
2. SPUN ALUMINUM FLASH COLLAR FINISHED TO MATCH THE POLE.
3. REINFORCEMENT AND FOOTING DESIGN PER STRUCTURAL DRAWINGS. (04 / S0.2)
4. FINISH SURFACE/FINISH GRADE.
5. SINGLE METAL SHEAVE CAST ALUMINUM TRUCK WITH BRASS FINIAL BALL.
6. LOCKING ACCESS DOOR WITH KEYED CYLINDER LOCK.
7. GROUND SPIKE PER MANUFACTURER.
8. EXPANSION JOINT. (03 / L4.01)

NOTES:
1. FURNISH AND ERECT FLAGPOLE WHERE SHOWN ON PLANS, COMPLETE WITH STANDARD FEATURES, A DOUBLE REVOLVING TRUCK FOR INTERNAL HALYARD OPERATION AND FOUNDATION SLEEVE FOR GROUND SET INSTALLATION, WITH EXPOSED HEIGHT, TOTAL LENGTH, BUTT DIAMETER AND BUTT WALL THICKNESS MEASUREMENTS AS LISTED. PROVIDE STANDARD FLAGPOLE FITTINGS AND EQUIPMENT PER MANUFACTURER'S SPECIFICATIONS. FURNISH SHOP DRAWINGS FOR REVIEW PRIOR TO CONSTRUCTION.
2. INSTALL PER MANUFACTURER'S DETAIL.
3. REFER TO SPEC. FOR MORE INFORMATION.

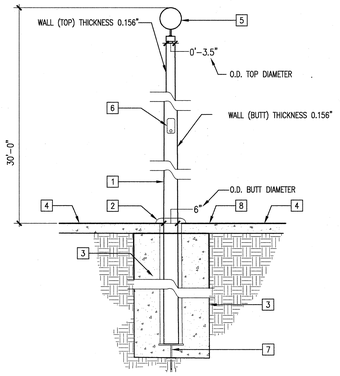

FLAG POLE | 1/2"=1'-0" | DT02FP01 | 01

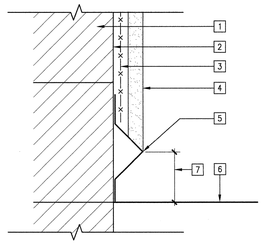

1. 8" X 8" X 16" CMU BLOCK.
2. FACE OF WALL
3. STEEL MESH
4. EXTERIOR PLASTER SYSTEM
5. GALVANIZED WEEP SCREED
6. FINISH SURFACE / FINISH GRADE
7. 2" ADJACENT TO HARDSCAPE, 6" ADJACENT TO SOIL

PLASTER FINISH | 3" = 1'-0" | DT02WD47 | 22

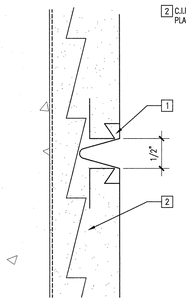

1. XJ-15 CONTROL JOINT
2. C.I.P. CONCRETE WALL WITH PLASTER FINISH.

PLASTER - CONTROL JOINT | FULL | DT09PL01 | 18

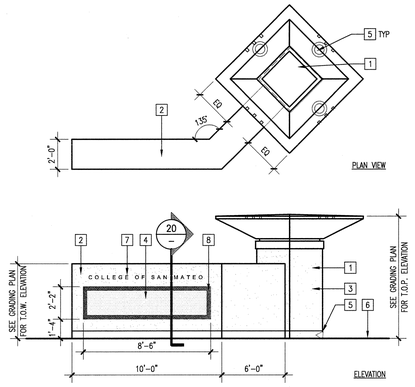

1. PILASTER WITH CAP AND FINIAL.
   SEE DETAIL (09 / –)
2. C.I.P. CONCRETE WALL (20 / –)
3. PAPERBACKED METAL LATH AND INTREGRAL COLOR PLASTER: COLOR TO BE MARBLE WHITE #10401. FINISH AND COLOR TO MATCH BUILDING 10N ARCHITECTURE. CONTRACTOR TO VERIFY ACTUAL COLOR AND FINISH. (18 / –) (22 / –)
4. ELECTRONIC READER BOARD.
5. PILASTER UPLIGHT, PER ELECTRICAL.
6. FINISH GRADE.
7. MONUMENT SIGNAGE LETTERING, SEE SIGNAGE PLANS FOR LETTERING FONT AND SIZE.
8. 3" VENT GRILL.

NOTE:
1. REFER TO STRUCTURAL PLANS FOR FOOTING SIZE AND REINFORCEMENT. (01 / S0.3) (09 / S0.3)
2. REFER TO MANUFACTURER INSTALLATION REQUIREMENTS FOR INSTALLATION, VENTING, AND DRAINAGE REQUIREMENTS.

PILASTER WITH READER BOARD | 1/4" = 1'-0" | pil w rdr brdX | 10

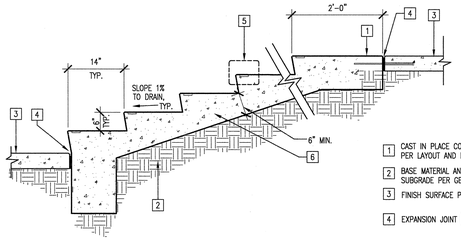

1. CAST IN PLACE CONCRETE STEPS PER LAYOUT AND MATERIALS PLAN
2. BASE MATERIAL AND COMPACTED SUBGRADE PER GEOTECH REPORT
3. FINISH SURFACE PER PLAN.
4. EXPANSION JOINT (03 / L4.01) (07 / L4.01)
5. STAIR NOSING (TYP.) (04 / –)
6. REINFORCEMENT AND FOOTING DESIGN PER STRUCTURAL DRAWINGS (14 / S0.2)

NOTE:
SEE SHEET LAYOUT SHEETS FOR QUANTITY OF TREADS AND RISERS AT EACH STAIR LOCATION.

CONCRETE STAIRS | 3/4" = 1'-0" | DT02PV20 | 02

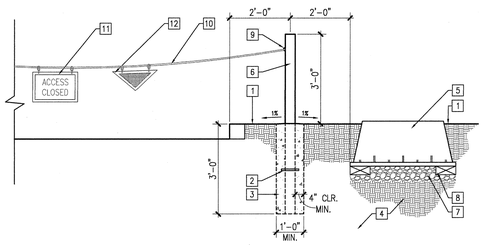

1. FINISH GRADE
2. 6" LONG #4 REBAR SET IN PRE-DRILLED HOLE.
3. C.I.P. CONCRETE FOOTING.
4. BASE MATERIAL & COMPACTED SUBGRADE PER THE GEOTECHNICAL REPORT.
5. CARSON 'SUPER JUMBO XL' IRRIGATION BOX W/BOLT DOWN LID MODEL #1730.
6. 4" DIAMETER SCHEDULE 40 STEEL PIPE BOLLARD. FILL BOLLARD WITH CONCRETE. BRONZE SATIN FINISH.
7. 3/4" DRAIN ROCK, 6" DEEP BELOW VALVE BOX. (NO SOIL IN VALVE BOX).
8. BRICK, 1 AT EACH CORNER.
9. 1/4" DIAMETER ROD, BENT INTO A LOOP AND WELDED TO THE BOLLARD TO RECEIVE CHAIN HOOK.
10. 1/2" DIAMETER STEEL BRAIDED CABLE. PROVIDE STEEL LOOP AND CARIBINER, CLIP AT EACH END. LENGTH AS NECESSARY.
11. 18" X 12" REFLECTORIZED SIGN, TEXT ON BOTH SIDES, COLOR ROYAL BLUE WITH WHITE LETTERS TO MATCH CAMPUS SIGNAGE. CENTER ONE AT CENTER OF ROADWAY.
12. 18" X 12" X 12" METAL REFLECTORIZED SIGN WITH ORANGE REFLECTOR PANEL ON BOTH SIDES. CENTER ONE AT EACH VEHICLE LANE.

VEHICULAR BOLLARD AND CHAIN | 1/2" = 1'-0" | DT02FE01 | 19

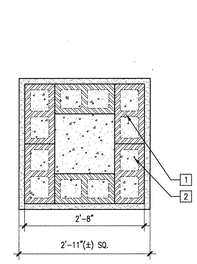

1. 8" X 8" X 16" CMU BLOCK PILASTER. (09 / –) (23 / L4.03)
2. REINFORCEMENT AND FOOTING DESIGN PER STRUCTURAL DRAWINGS (08 / S0.3)

3' X 3' PILASTER SECTION | 3/4" = 1'-0" | DT02WD03 | 15

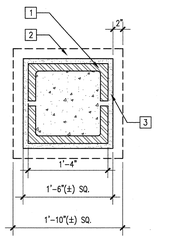

1. 8" X 8" X 16" CMU BLOCK PILASTER. (13 / –) (16 / L4.04)
2. QUICK CRETE PRECAST PILASTER CAP.
3. PLASTER FINISH PER (13 / –)

NOTE:
REFER TO STRUCTURAL DETAILS FOR FOOTING SIZE AND REINFORCEMENT. (07 / S0.3)

18" X 18" PILASTER SECTION | 1" = 1'-0" | DT02WD04 | 11

1. FINISH SURFACE / FINISH GRADE PER PLAN.
2. C.I.P CONCRETE CHEEK WALL W/ ARDEX FINISH PER MATERIALS PLAN.
3. 1/8" EASED EDGE. TYP ALL EDGES.
4. TOP OF WALL.
5. EXPANSION JOINT (03 / L4.01) (07 / L4.01)
6. CONCRETE STAIRS (02 / –)
7. BASE MATERIAL AND COMPACTED SUBGRADE PER GEOTECHNICAL REPORT
8. HANDRAIL (01 / L4.03)
9. TOP OF CHEEK WALL TO MEET STAIR NOSE FLUSH, TYP AT ALL RISERS.

SEE STRUCTURAL DETAIL FOR FOOTING DESIGN & REINFORCEMENT. (17 / S.02)

CHEEK WALL AT CONCRETE STAIRS | 3/4" = 1'-0" | DT02WD54X5 | 03

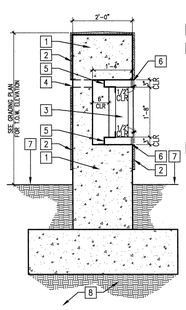

1. C.I.P. CONCRETE WALL.
2. PAPERBACKED METAL LATH AND INTREGRAL COLOR PLASTER: COLOR TO BE MARBLE WHITE #10401. FINISH AND COLOR TO MATCH BUILDING 10N ARCHITECTURE. CONTRACTOR TO VERIFY ACTUAL COLOR AND FINISH. (18 / –) (22 / –)
3. ELECTRONIC READER BOARD, SEE SIGNAGE PLANS FOR MORE INFORMATION AND INSTALLATION INSTRUCTIONS. INSET FACE OF BOARD ½" FROM FACE OF WALL.
4. HOT AIR DUCT.
5. SUPER STRUCTURE MOUNTING BRACKET PER MANUFACTURER.
6. VENT GRILL, METAL LOWERED, CONTINUOUS, TOP AND BOTTOM. BLACK POWDERCOAT FINISH.
7. FINISH GRADE.
8. BASE MATERIAL AND COMPACTED SUBGRADE PER GEOTECHNICAL REPORT.

NOTE:
1. REFER TO STRUCTURAL PLANS FOR FOOTING SIZE AND REINFORCEMENT. (11 / S0.3)
2. REFER TO MANUFACTURER INSTALLATION REQUIREMENTS FOR INSTALLATION, VENTING, AND DRAINAGE REQUIREMENTS.

READER BOARD SIGN | 1/2" = 1'-0" | NAME | 20

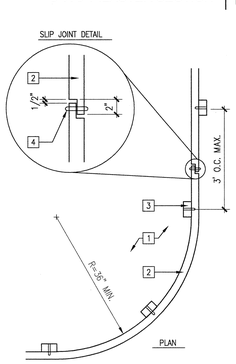

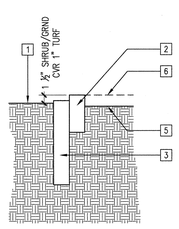

1. TURF / SHRUB OR GROUND COVER PER PLANTING PLAN.
2. 2" x 4" RECYCLED PLASTIC HEADER
3. 1" x 2" x 18" RECYCLED PLASTIC STAKES @ 3' O.C. MAX. USE PLATED DECK SCREWS FOR ATTACHMENT.
4. 7 GA. GALVANIZED STEEL HAIRPIN PER MFG.
5. FINISH GRADE 1 1/2" AT GROUND COVER, 1" AT TURF.
6. TOP OF HEADER TO BE FLUSH WITH ADJACENT FINISH SURFACE/D.G.

NOTES:
1. TOP OF HEADERBOARD SHALL MEET ALL PAVED SURFACES FLUSH.
2. ALLOW FOR THERMAL EXPANSION BY LEAVING GAPS IN JOINTS OR AT THE END OF THE RUN.
3. DO NOT SCREW THROUGH SLIP JOINT.
4. HEADERBOARD SHALL BE "TREX" COMPOSITE LUMBER OR APPROVED EQUAL.

RECYCLED PLASTIC HEADER BOARD | 1 1/2" = 1'-0" | DT02HD11 | 12

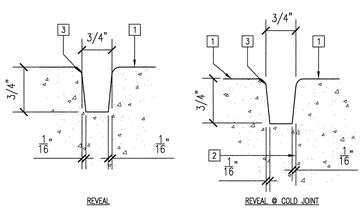

1. C.I.P. CONCRETE WALL, PER MATERIALS PLAN
2. COLD JOINT – WHERE APPLICABLE
3. 1/8" MACHINE ROUTED CORNERS AND EDGES

NOTE:
1. PROVIDE REVEAL @ ALL COLD JOINTS.
2. REVEAL SHOULD BE CONTINUOUS ON SIDES AND TOP OF WALL, UNLESS OTHERWISE NOTED ON PLAN OR ELEVATION.
3. SEE ELEVATIONS AND LAYOUT AND MATERIALS PLAN FOR JOINT LOCATIONS.

REVEALS | FULL | DT02WD52X | 08

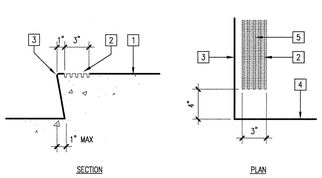

1. CONCRETE STAIRS. SEE MATERIALS PLAN FOR COLOR AND FINISH.
2. TROWELED GROOVES.
3. 1/2" RADIUS AT TREAD NOSE.
4. EDGE OF STAIRS.
5. YELLOW PAINT AT GROOVES. SEE NOTE 2 BELOW.

NOTE:
1. GROOVES REQUIRED AT EACH TOP APPROACH AND EACH TREAD OF ALL EXTERIOR STAIRS.
2. PAINT 3" BAND OVER GROOVES WITH YELLOW PAINT. PAINT MUST CONTRAST 70% FROM TREADS. CREATE MOCK UP FOR REVIEW PRIOR TO CONSTRUCTION.

STAIR NOSING | 1-1/2" = 1'-0" | stair_nosing | 04

McCarthy Building Companies, Inc.
343 Sansome Street, 14th Floor
San Francisco, California 94104
P 415 | 364-1339
F 415 | 397-5999

LICENSED ARCHITECT STEVEN C. KENNEDY No. C 14099 STATE OF CALIFORNIA

REGISTERED LANDSCAPE ARCHITECT REVIN S. MAHER No. 2108 RENEWAL 5-31-10 04-09-09 STATE OF CALIFORNIA

IDENTIFICATION STAMP
DIV. OF THE STATE ARCHITECT
OFFICE OF REGULATION SERVICE
APPL. #: 01-110097
AC. FLS DSA SS S.H.
DATE APR 09 2009
FILE NUMBER:

This and all other project documents and all ideas, aesthetics, and designs incorporated therein are instruments of service. All project documents are the registered property of LPA, INC. LPA hereby grants a limited license to use the same for any project or purpose except as described in the contractual agreement between McCarthy and the District. LPA hereby gives formal notice that any such project document use, reproduction or modification (misuse) is not only unlawful but automatically binds all parties involved with misuse to fully indemnify and defend LPA and LPA's Consultants to the maximum extent permitted by law for any claims, damages or liabilities arising directly or indirectly from project document misuse. Project documents describe design intent of work and are not a representation of as-built or existing conditions. LPA and LPA's Consultants make no representations concerning the accuracy of documents and are not responsible for any discrepancies between project documents and the existing conditions.

© Copyright 2008

College of San Mateo
Site Package
San Mateo, CA

Developed for
San Mateo County Community College District

Revision	Description	Date

Revision	Description	Date
	DSA SUBMITTAL	19 SEPT 2008
	DSA FINAL	09 APRIL 2009

Job. No.	27082.30
Date	09 APRIL 2009
Drawn by	AG, RF
Checked by	SM
Scale	AS SHOWN

CONSTRUCTION DETAILS

L4.02