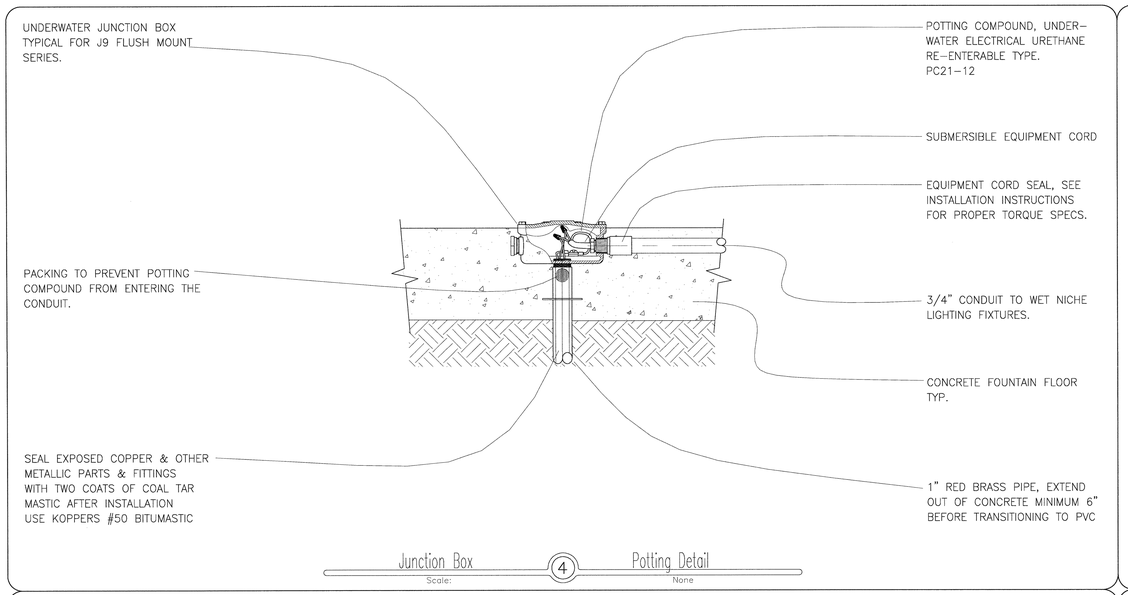

Junction Box (4) Potting Detail
Scale: None

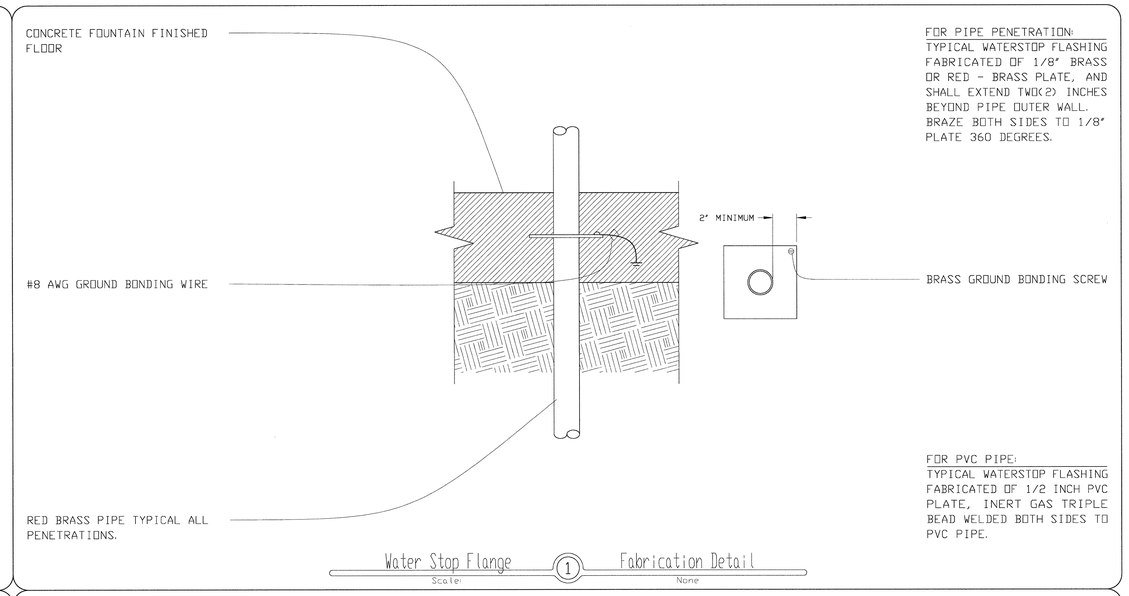

Water Stop Flange (1) Fabrication Detail
Scale: None

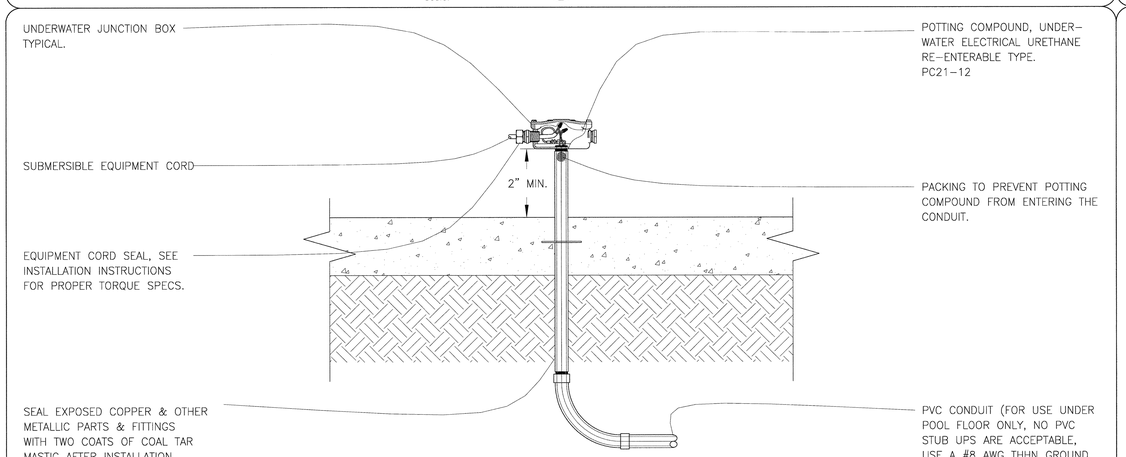

Junction Box (5) Potting Detail
Scale: None

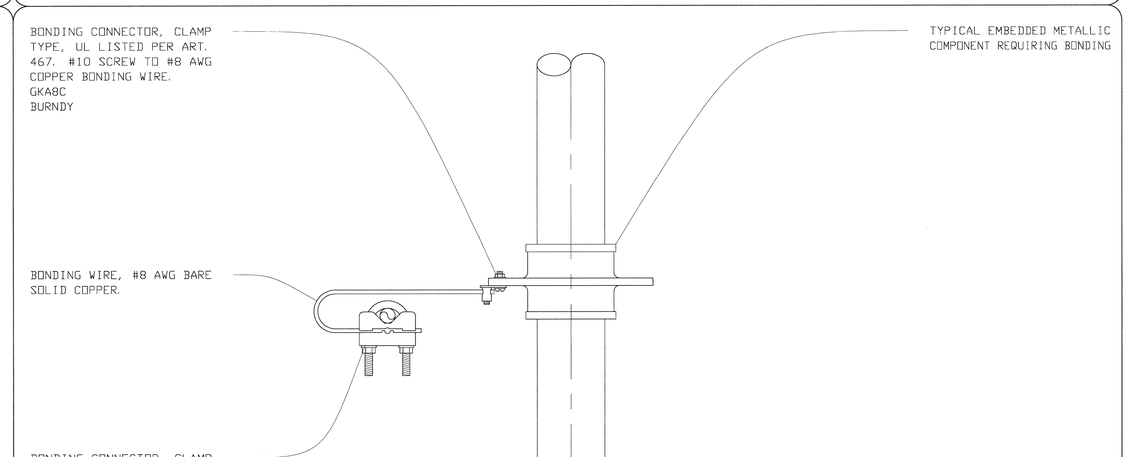

Bonding Clamp (2) Detail
Scale: 1/2

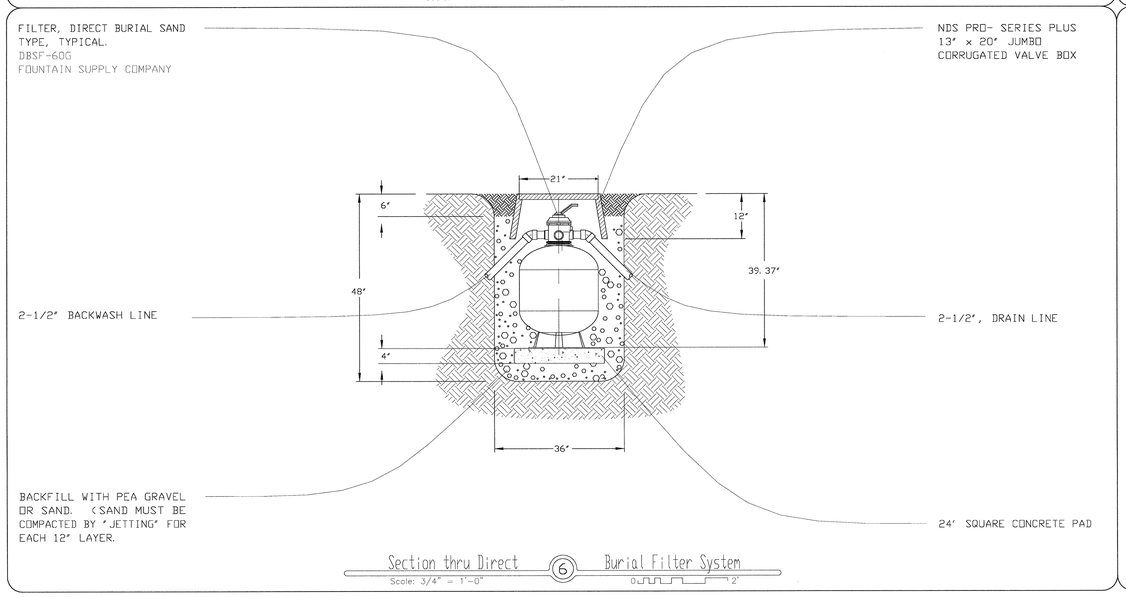

Section thru Direct (6) Burial Filter System
Scale: 3/4" = 1'-0"

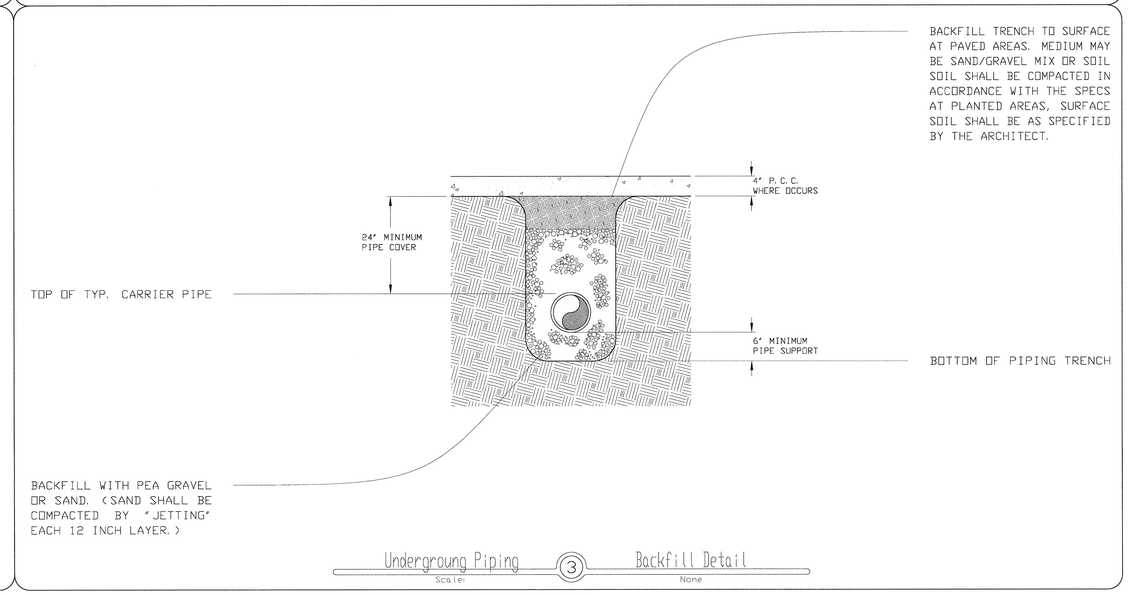

Underground Piping (3) Backfill Detail
Scale: None

McCARTHY
LPA KH

McCarthy Building Companies, Inc
343 Sansome Street, 14th Floor
San Francisco, California 94104
P 415 364-1339
F 415 397-5999

REGISTERED PROFESSIONAL ENGINEER
CHANG KOO
No. 5289
Exp. 6/30/
STRUCTURAL
STATE OF CALIFORNIA

Formosa
Fountain & Engineering Company
412 E. Commonwealth Ave., Suite 1
Fullerton, Calif., 92832
Tel:(714)526-6606/Fax:(714)526-6616
www.formosafountains.com

This and all other project documents and all ideas, aesthetics and designs incorporated therein are instruments of service. All project documents are the registered property of LPA, INC. (LPA) and cannot be used for any purpose other than for said by LPA or persons authorized as described in a written agreement between facility and the District. LPA hereby gives formal notice that any such project document use, reproduction or modification (misuse) is not only unlawful but automatically binds all parties involved with misuse to fully indemnify and defend LPA and LPA's Consultants to the maximum legal extent against all losses, demands, claims or liabilities arising directly or indirectly from project document misuse. Project documents are based on the best of work and are not a representation of as-built or existing conditions. LPA and LPA's Consultants make no representations concerning the accuracy of documents and are not responsible for any discrepancies between project documents and the existing conditions.

© Copyright 2008

IDENTIFICATION STAMP
DIVISION OF THE STATE ARCHITECT
APPL NO. 110097
AC FLS SR D.H.
DATE APR 09 2009

College of San Mateo
Site Package
San Mateo, CA

Developed for
San Mateo County Community College District

Revision	Description	Date

Revision	Description	Date
	DSA SUBMITTAL	19 SEPT 2008
	DSA FINAL	09 APRIL 2009

Job. No.	27082.30
Date	09 APRIL 2009
Drawn by	VM
Checked by	LM
Scale	AS SHOWN

FOUNTAINS DETAILS

F0.06