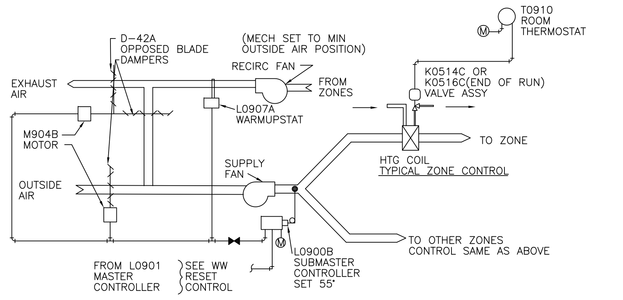

H & V UNIT CONTROL

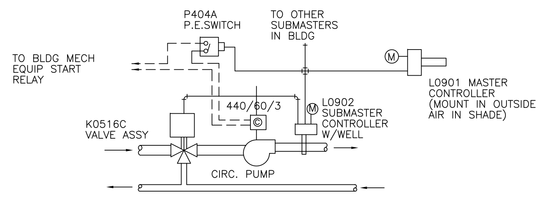

TYPICAL BLDG HOT WATER RESET CONTROL

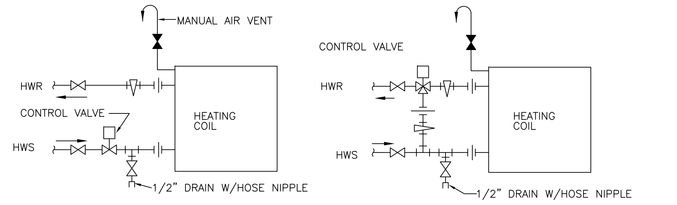

THROTTLING VALVE

THREE-WAY MIXING VALVE

NOTE : PROVIDE HAND HOLE ACCESS DOOR IN BOTTOM OF DUCT UP STREAM OF COIL

BOOSTER HOT WATER HEATING PIPING DIAGRAM

NOT TO SCALE

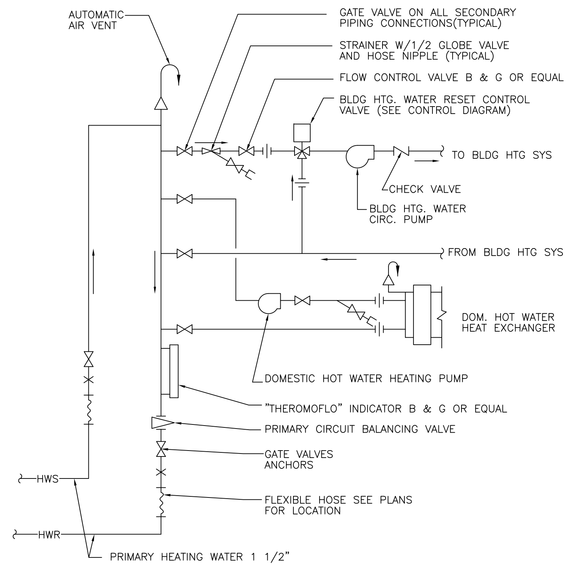

BLDG HEATING PIPING SCHEMATIC

NOT TO SCALE

LEGEND AND SYMBOLS

- HWS — HEATING WATER SUPPLY
- HWR — HEATING WATER RETURN
- F — FIRE LINES
- S — SPRINKLER LINES
- D — DRAIN LINES
- DOMESTIC HOT WATER LINES
- V — VENT LINES
- SL — LOW PRESSURE STEAM
- RL — LOW PRESSURE RETURN
- BALANCING VALVE
- CHECK VALVE
- GATE VALVE
- GLOBE VALVE
- CONTROL VALVE
- PRESSURE GAUGE
- THERMOMETER
- STRAINER WITH VALVE AND HOSE NIPPLE
- AUTOMATIC AIR VENT (DETAIL)
- AV — AUTOMATIC AIR VENT (PLAN)
- FD — FIRE DAMPER
- PIPE EXPANSION JOINT
- PIPE ANCHOR
- T — THERMOSTAT
- BALANCING DAMPER
- R — RISE IN DUCT IN DIRECTION OF ARROW
- L.R. — LOW REGISTER
- H.R. — HIGH REGISTER
- CFM / SIZE — CEILING DIFFUSER
- BAFFLE
- CFM / SIZE — CEILING RETURN OR EXHAUST
- DUCT TURN
- AIR EXTRACTOR
- EQUIPMENT SCHEDULE
- BR — RADIATION SCHEDULE
- LENGTH OF FINNED ELEMENT
- TYPE OF RADIATION

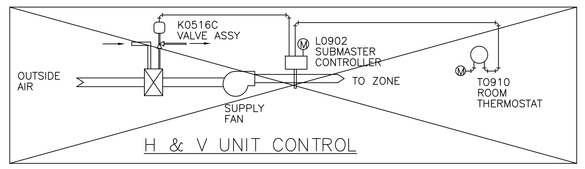

H & V UNIT CONTROL

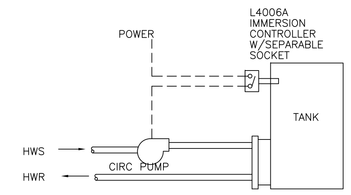

DOMESTIC H.W. CONTROL

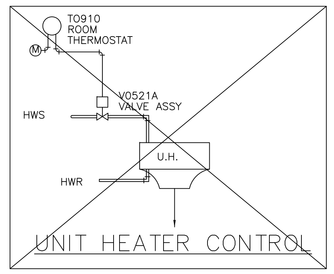

UNIT HEATER CONTROL

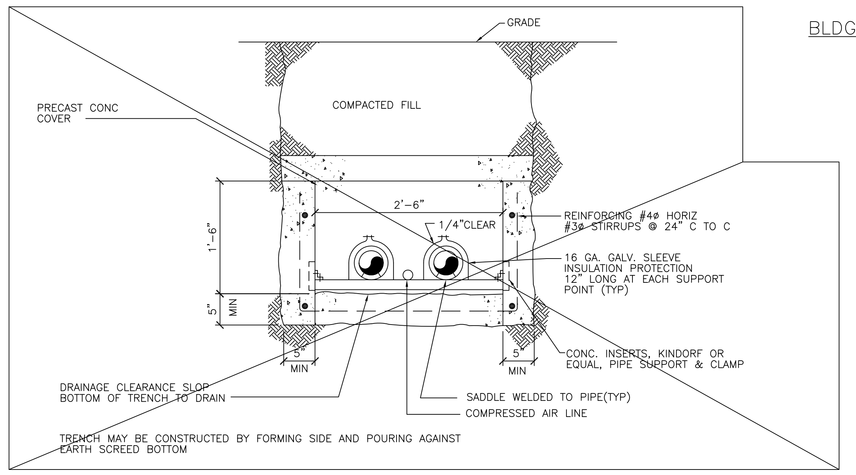

TYPICAL SECONDARY TRENCH

NOT TO SCALE

SEE SITE DEVELOPMENT
TYPICAL DETAILS

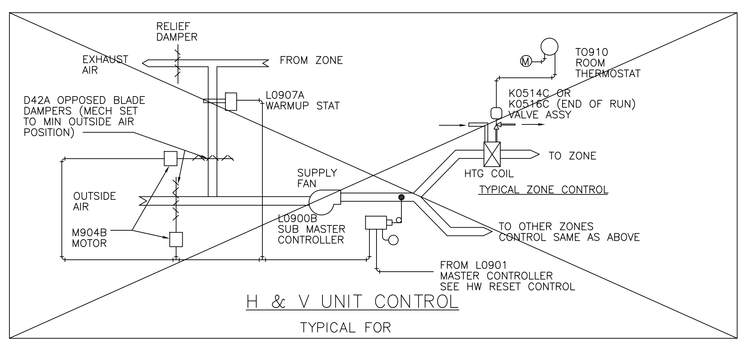

H & V UNIT CONTROL

TYPICAL FOR

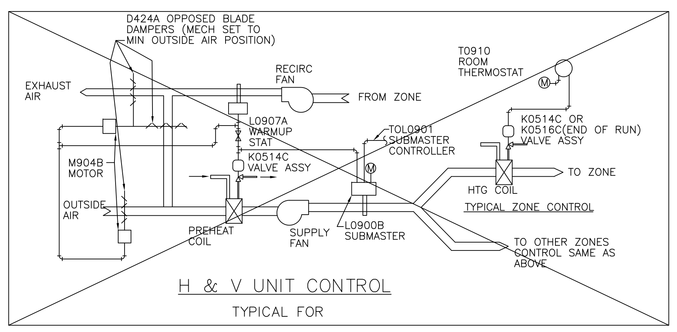

H & V UNIT CONTROL

TYPICAL FOR

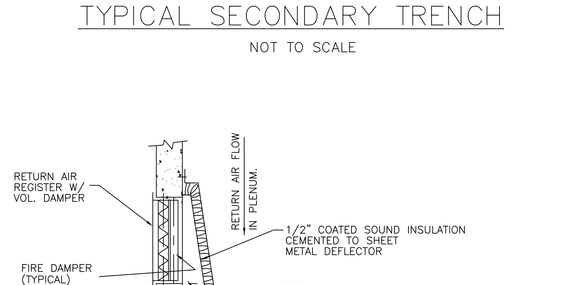

PLAN

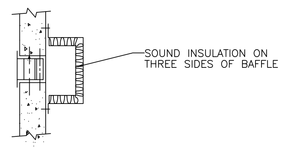

SECTION

NOTE: THIS BAFFLE SHALL BE INSTALLED AT EACH ROOM RETURN AIR CONNECTION TO CORRIDOR PLENUM.

RETURN AIR SOUND BAFFLE DETAIL

NOT TO SCALE

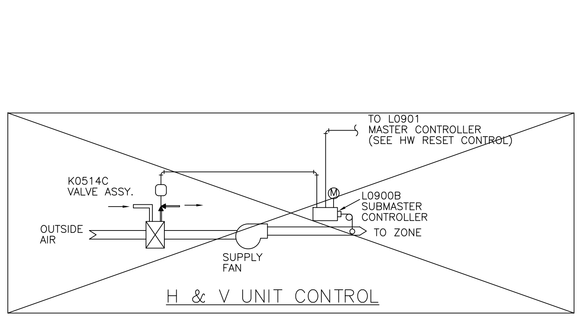

H & V UNIT CONTROL

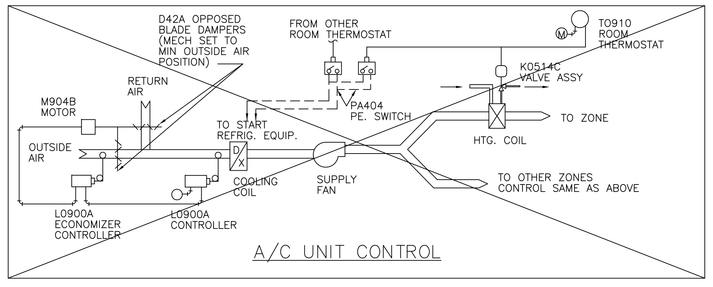

A/C UNIT CONTROL

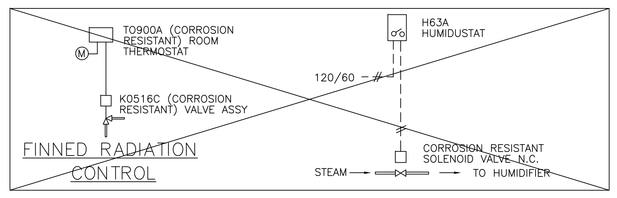

FINNED RADIATION CONTROL

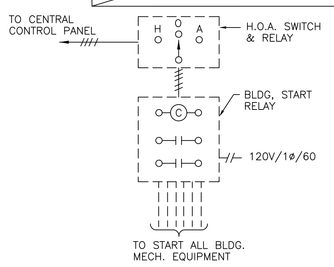

MECH EQUIPMENT START RELAY

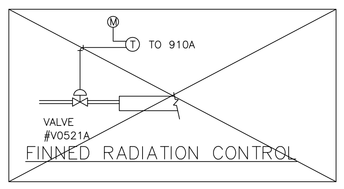

FINNED RADIATION CONTROL

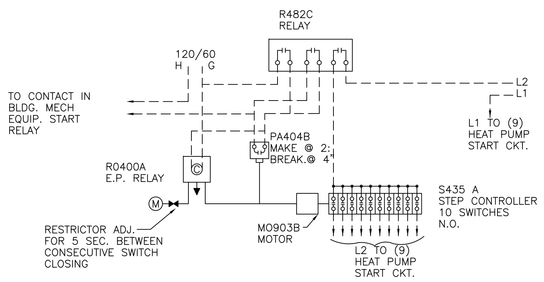

HEAT PUMP SEQUENCE START CONTROL

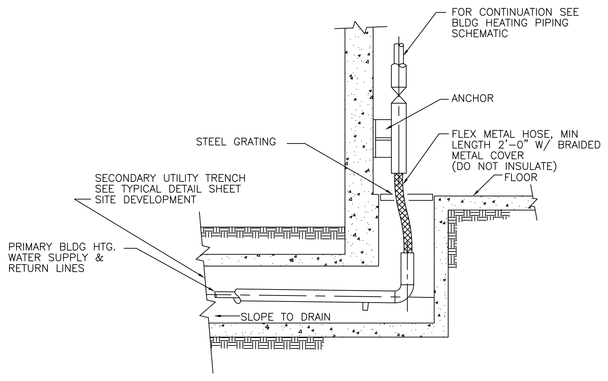

TYPICAL BLDG. PRIMARY HEATING WATER CONNECTION

SCALE: 1/2" = 1'-0"

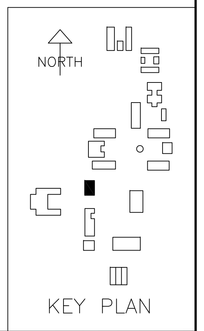

KEY PLAN

GEORGE W. HUTCHINSON DIRECTOR OF BUILDING CONSTRUCTION	JULIO L. BORTOLAZZO SUPERINTENDENT	JOHN CARL WARNECKE, ARCHITECT	JOHN. A. BLUME & ASSOC. ENGINEERS STRUCTURAL ENGINEERS KELLER & GANNON MECHANICAL & ELECTRICAL ENGINEERS ROYSTON HANAMOTO AND MAYES LANDSCAPE ARCHITECTS	JOHN CARL WARNECKE A.I.A. ARCHITECT 111 NEW MONTGOMERY ST. • SAN FRANCISCO	**COLLEGE OF SAN MATEO** COLLEGE HEIGHTS CAMPUS SAN MATEO, CALIF.	JOB NO. DRAWN BY	DATE 1 DEC, 1960 CHECKED BY RAW	ADMINISTRATION BUILDING TYPICAL DETAILS	BLDG. NO. 1	SHEET NO. M2 OF 2

SAN MATEO JUNIOR COLLEGE DISTRICT