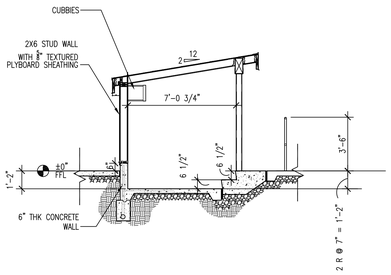

9 DUGOUT SECTION 01
1/4" = 1'-0"

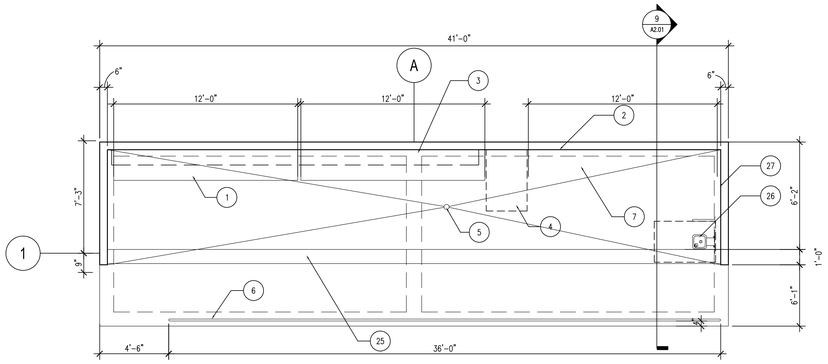

1 FLOOR PLAN DUGOUT (THIRD BASE LINE - AS SHOWN; FIRST BASE LINE OPP. HAND)
SCALE 1/4" = 1'-0"

PLAN KEY NOTES

1. BENCHES
2. DRINKING FOUNTAIN
3. LINE OF OVERHEAD CUBBIES
4. ACCESSIBLE FLOOR SPACE 32"x48"
5. FLOOR DRAIN: SEE UTILITY PLAN
6. RAIL W/NETTING
7. FLOOR RAIL
8. PREFORMED JOINT FILLER
9. THICKENED SLAB EDGE
10. 6" FDN WALL AND CURB
11. FTG. SEE STRUCTURAL DRAWINGS
12. 4" PIPE COLUMN
13. 18" ø CONC. PIER
14. DRAIN: SEE SITE UTILITY PLAN
15. DOWEL JOINTS
16. CONTROL JOINTS
17. 2x10 FASCIA BD.
18. 2X6 JOISTS @ 2' O.C.
19. 2X6 @ 2'-0" O.C. STUD WALL BELOW
20. 5½"X12" GLB
21. 2X10 RAKE JOIST
22. POST SEE STRUCTURAL DRAWINGS
23. 2X10 FASCIA BD.
24. 6"X6" TIE BEAM
25. ONE, 6.5" STEP DOWN FULL LENGHT
26. GARAVENTA INCLINE LIFT N.I.C. (PROVIDED BY OWNER)
27. POSITION OF LIFT AT LOWERED POSITION

DES ARCHITECTS ENGINEERS
399 Bradford Street Redwood City, Ca. 94063
Tel: (650) 364-6453
Fax: (650) 364-2618
www.des-ae.com

CMX Sports Engineers
7740 NORTH 16TH STREET
SUITE 100
PHOENIX, AZ. 85020
Ph: (602) 567-1900
Fax: (602) 567-1901

ROBERT A. BOTHMAN, INC.
General Engineering and Building Contractors
650 QUINN AVENUE
SAN JOSE, CA. 95112
Ph: (408) 279-2277
Fax: (408) 279-2281

SAN MATEO COUNTY COMMUNITY COLLEGE DISTRICT ATHLETIC FIELDS PHASE 2

INCREMENT 1.A
COLLEGE OF SAN MATEO
SOFTBALL FIELD

1700 W. Hillsdale Blvd.
San Mateo, Ca. 94402

DUGOUT FLOORPLANS

ISSUE:	DATE:	DESCRIPTION:
	01-22-07	REVIEW

DRAWN BY: A. MARQUEZ
REVIEWED BY: V. AMRHEIN
APPROVED BY: V. AMRHEIN
DES PROJECT NO.: 9126.12

INDENTIFICATION STAMP
DIVISION OF THE STATE ARCHITECT
APPL. #:
FILE #: 41-C1
AC_____ FLS_____ SS_____
DATE:_____

LICENSED ARCHITECT VINCENT AMRHEIN C-28933 12/31/07 REGISTRATION DATE STATE OF CALIFORNIA

© 2006

SHEET NO.
- A2.01

Jun 30, 2008 - 11:09am obaksh P:\SMCCCD\MHP2\912612\Dwg\Incr 1, 2 and 6 CSM Softball\Incr 1\Incr 1A\A2.01 FLOOR PLAN_OPTION01.dwg