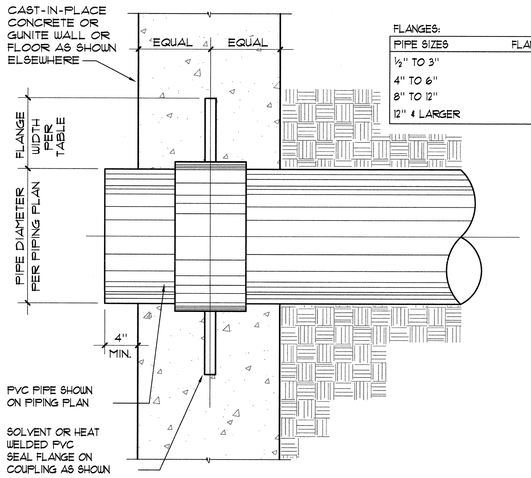

FLANGES:

PIPE SIZES	FLANGE WIDTH
½" TO 3"	½"
4" TO 6"	1½"
8" TO 12"	2"
12" & LARGER	2½"

1 WATER STOP DETAIL

NO SCALE

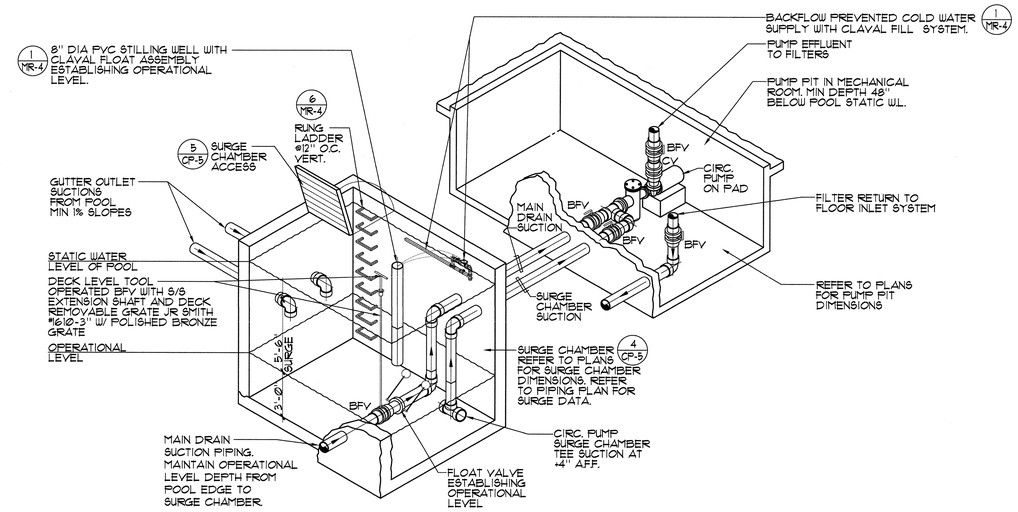

2 SURGE CHAMBER PIPING SCHEMATIC

NO SCALE

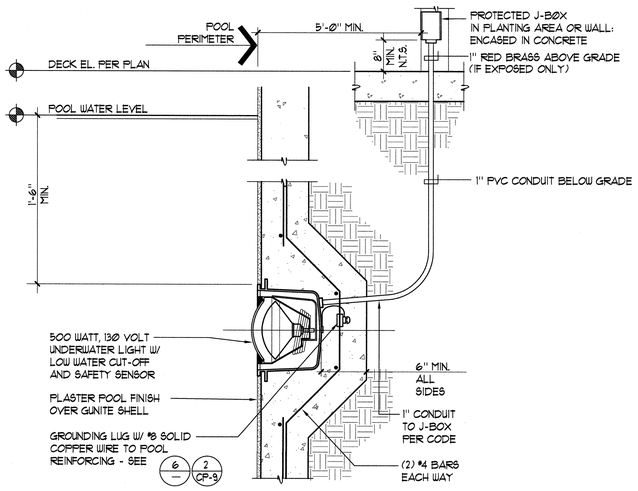

UNDERWATER LIGHT NOTES:

1. ALL CONDUITS IN POOL LIGHTING SYSTEM TO BE A MINIMUM OF 1" ø.
2. (2/CP-8) CONDUCTORS TO POOL J-BOXES SHALL BE MINIMUM 2-#8 & 1 #8 (SEE UNDERWATER LIGHT PLAN) SOLID UNBROKEN TO MAIN PANEL ISOLATED GROUND BUSS. THIS BUSS IS TO BE CONNECTED WITH SOLID INSULATED #8 COPPER WIRE TO UFER & COLDWATER GROUNDING LUG ON GROUNDING BUSS. UPSIZE CONDUCTORS AS REQUIRED FOR HOMERUNS EXCEEDING 100'.
3. (4/—) ALL BRASS POOL J-BOXES SHALL BE FLUSH MOUNTED IN WALLS. IF FLUSH MOUNTING IS NOT POSSIBLE THEN MOUNTING SHALL BE SURFACE MOUNTED AND CONCRETE ENCASED.
4. CONDUITS WHERE ALLOWED BY CODE SHALL BE P.V.C. (POLYVINYL CHLORIDE) FROM WET NICHES TO BRASS J-BOXES TO LIGHTING PANEL. ALL CONDUITS IN FREE AIR SPACE AND ALL RISERS SHALL BE RED BRASS TYPICAL.
5. LIGHTING CONTACTORS SHALL BE "ALLEN-BRADLEY" #500 L± OR EQUAL MOUNTED IN A NEMA 12 HINGED COVER - LOCKABLE ENCLOSURE. CONTACTORS TO BE SWITCHED BY MOMENTARY SWITCH EQUAL TO "HUBBELL" #5551 MOUNTED IN J-BOX IN MECHANICAL EQUIPMENT ROOM. PROVIDE REMOTE UNDERWATER LIGHT SWITCH IN POOL BUILDING CONTROL ROOM.
6. BRASS POOL J-BOXES SHALL BE "HYDREL" #1119 ± W/1" HUBS OR EQUAL. (NO DIE CAST BOXES).
7. STRINGS SHALL BE PULLED IN ALL CONDUITS PRIOR TO PLACEMENT OF CONCRETE.
8. LOCAL, COUNTY OR CITY CODES SHALL BE ADHERED TO. SPECIFICATIONS TO BE IN ACCORDANCE WITH SECTION 680 OF LATEST N.E.C. BOOK.
9. PROVIDE PULL BOXES AS MAY BE REQUIRED FOR RUNS EXCEEDING 150 FT. OR DUE TO CHANGES IN GRADE OR DIRECTION.
10. CONTRACTOR SHALL TEST UNDERWATER POOL LIGHT GFIC CIRCUITS AND PROVIDE LETTER TO OWNER/DSA UPON SUCCESSFUL TEST.

3 UNDERWATER LIGHT

1½"=1'-0"

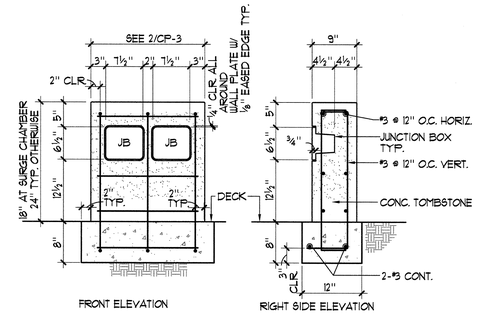

NOTES:

1. PROVIDE ⅛" EASED EDGE ON ALL CONCRETE CORNERS. TYP. (10/L4.0)
2. ALL WALLS TO HAVE ARDEX FINISH WITH LIGHT SANDBLAST TO MATCH ALL OTHER SITE WALLS. (10/L4.0) SIM.
3. LENGTH OF WALLS VARIES. SEE SHEET L1.0 FOR EXACT LENGTH AND LOCATION OF ALL WALLS.
4. SEE 2/CP-3 FOR TYPICAL PLATE LAYOUT ON ALL WALLS.
5. FACE PLATE OF JUNCTION BOX TO BE FLUSH WITH FACE OF WALL, TYP.

4 UNDERWATER LIGHT JUNCTION BOX CONCRETE SURROUND DETAIL

1"=1'-0"

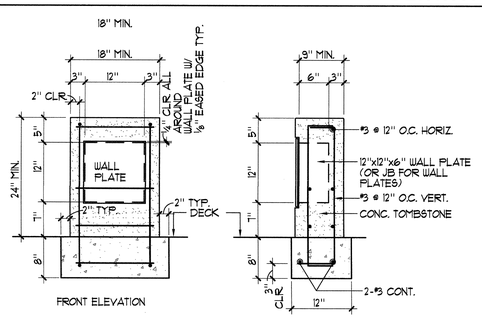

NOTES:

1. PROVIDE ⅛" EASED EDGE ON ALL CONCRETE CORNERS. TYP. (10/L4.0)
2. ALL WALLS TO HAVE ARDEX FINISH WITH LIGHT SANDBLAST TO MATCH ALL OTHER SITE WALLS. (10/L4.0) SIM.
3. LENGTH OF WALLS VARIES. SEE LAYOUT AND MATERIALS PLAN, SHEET L1.0 FOR EXACT LENGTH AND LOCATION OF ALL WALLS.
4. SEE 2/CP-3 FOR TYPICAL PLATE LAYOUT ON ALL WALLS.
5. FACE PLATE TO BE FLUSH WITH FACE OF WALL, TYP.

5 TIMING SYSTEM WALL PLATE CONCRETE SURROUND DETAIL

1"=1'-0"

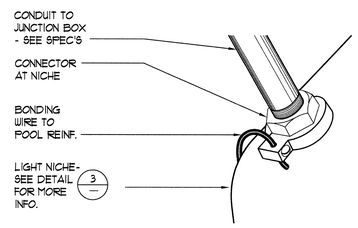

NICHE CONNECTOR

NO SCALE

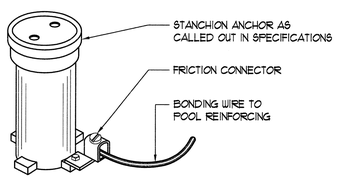

STANCHION ANCHOR

NO SCALE

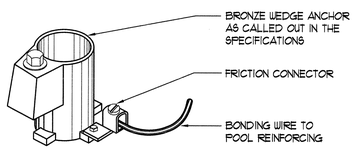

WEDGE ANCHOR

NO SCALE

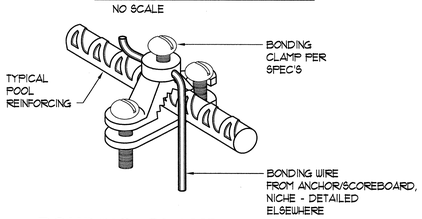

BONDING CLAMP

NO SCALE

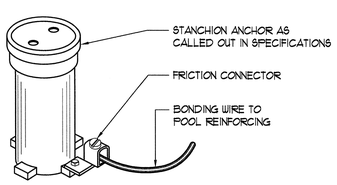

STARTING BLOCK ANCHOR

NO SCALE

6 BONDING DETAILS

NO SCALE

AQUATIC DESIGN GROUP
5324 PARADISE AVE., OAKLAND, CA 95608
Tel 760.438.8400 Fax 760.438.5231

McCarthy LPA KH

McCarthy Building Companies, Inc.
343 Sansome Street, 14th Floor
San Francisco, California 94104
P 415 |364-1339
F 415 |397-5999

LICENSED ARCHITECT STEVEN C. KENDRICK No. C14099 REN 09-30-07 STATE OF CALIFORNIA

LICENSED ARCHITECT STEVEN J. FERRIS No. C-26222 REN 03/31/09 STATE OF CALIFORNIA

IDENTIFICATION STAMP
DIV. OF THE STATE ARCHITECT
OFFICE OF REGULATION SERVICE
APPL. #: 01-110097
AC. FLS DWK CS P.M.
DATE APR 09 2009

FILE NUMBER: 41-C1

This and all other project documents and all ideas, aesthetics and designs incorporated therein are instruments of service. All project documents are the registered property of LPA, INC. (LPA) and cannot be lawfully used in whole or in part for any project or purpose except as described in the contractual agreement between LPA and Client. LPA hereby gives formal notice that any other use, reproduction or distribution without modification (misuse) is not only unlawful but indemnifying blinds all parties involved with misuse to fully indemnify and defend LPA and LPA's Consultants to the maximum legal extent against all losses, demands, claims or liabilities arising directly or indirectly from project document misuse.

Project documents describe design intent of work and are not a representation of as-built or existing conditions. LPA and LPA's Consultants make no representations concerning the accuracy of documents and are not responsible for any discrepancies between project documents and the existing conditions.

© Copyright 2008

College of San Mateo
Site Package
San Mateo, CA

Developed for
San Mateo County Community College District

Revision	Description	Date

Revision	Description	Date
	DSA SUBMITTAL	19 SEPT 2008
	DSA FINAL	09 APRIL 2009

Job. No.	27082.30
Date	09 APRIL 2009
Drawn by	NFC
Checked by	SJF
Scale	AS NOTED

DETAILS

CP-8