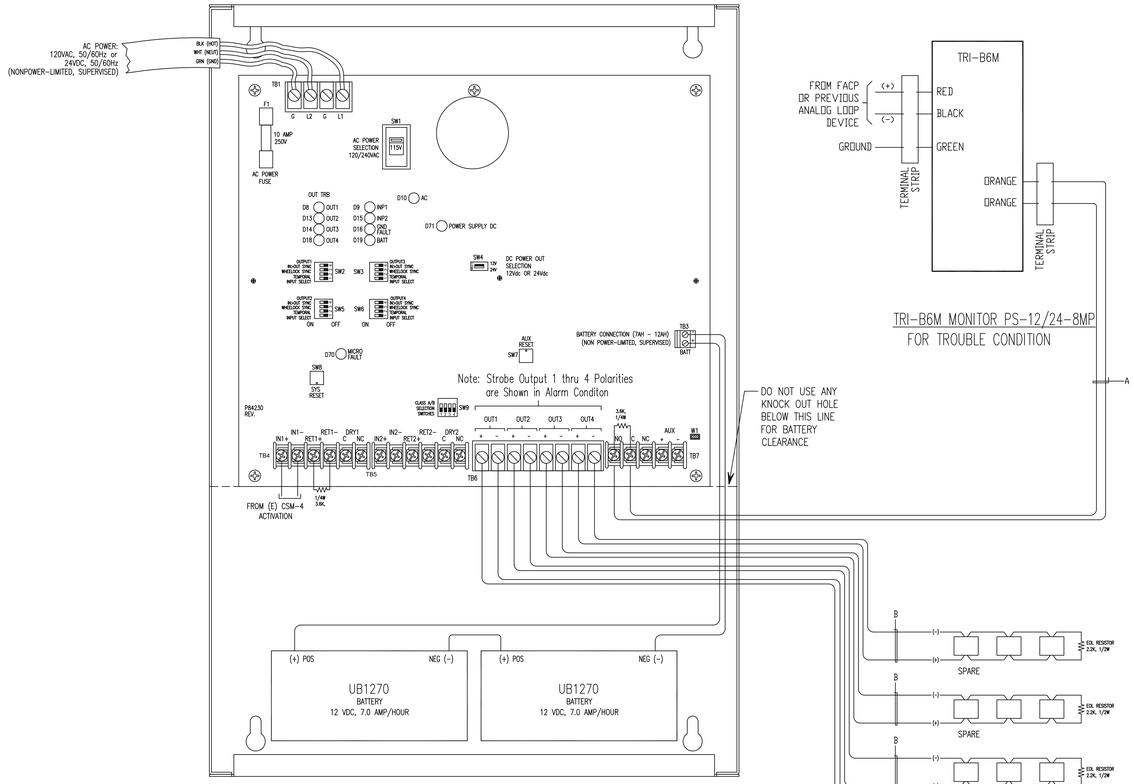

TRI-B6M MONITOR PS-12/24-8MP
FOR TROUBLE CONDITION

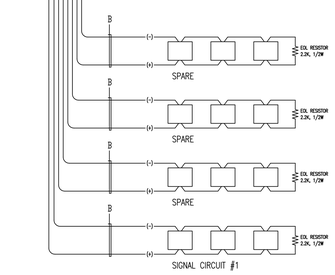

NOTE:

1) USE APPROPRIATE END-OF-LINE RESISTOR VALUES for:

MXL F.A. CONTROL PANEL ---------- 2.2K, 1/2 WATT
ZC1-8B ZONE CONTROL CARD ---------- 24K, 1/2 WATT
PS-12/24-8MP WHEELOCK POWER BOOSTER--- 2.2K, 1/2 WATT

WHEELOCK POWER BOOSTER (PS-12/24-8MP)

WHEELOCK POWER BOOSTER CIRCUIT SCHEDULE			
CIRCUIT NO:	PANEL NO:	DEVICE TYPE	LOCATION
CKT A1	PS-12/24-8MP #1	HORN/STROBES	RESTROOMS
SPARE	PS-12/24-8MP #1		
SPARE	PS-12/24-8MP #1		
SPARE	PS-12/24-8MP #1		

VOLTAGE DROP CALCULATION BASED ON #12 AWG				MAXIMUM DISTANCE TO RETAIN A 7.5% VOLTAGE DROP
CKT	DISTANCE (ft.)	CURRENT LOAD (amps)	VOLTAGE DROP (%)	MAX DISTANCE (ft.) ALLOWED
A1	100	0.396	0.546	1374.16
SPARE	0	0	0.000	#DIV/0!

VOLTAGE DROP CALCULATIONS
(WORST CASE SHOWN)

FORMULA: VOLTAGE DROP CALCULATIONS (FOR A GIVEN LENGTH OF CONDUCTOR) $= \frac{I \times D \times 21.6}{C.M.}$

WHERE:
I = AMPERES PER TERMINAL LOAD
D = ONE WAY DISTANCE OF CONDUCTOR (IN FEET) MEASURED FROM SOURCE OF SUPPLY TO LOAD
21.6 = CONSTANT (RESISTANCE OF CONDUCTORS AT 10.8 OHMS PER L.M. FOR TWICE THE LENGTH)
C.M. = CROSS SECTIONAL AREA IN CIRCULAR MILS (SEE TABLE AT RIGHT)

WIRE SIZE	CIRCULAR MILS (C.M.)
12 AWG	6530
14 AWG	4110
16 AWG	2580
18 AWG	1620
20 AWG	1020

GIVEN:
CIRCUIT DESIGNATION = A1
APPROX LENGTH OF CONDUCTOR = 100 FEET
CURRENT LOAD = 0.396 AMPS
WIRE SIZE USED = 12 AWG

VOLTAGE DROP $= \frac{0.396 \times 100 \times 21.6}{6530} = \frac{855.360}{6530} = 0.131$ VOLTS

% OF VOLTAGE DROP $= \frac{0.131 \text{ VOLTS}}{24 \text{ VOLTS}} = 0.005458$ or 0.546 %

NOTES:
1. THE OPERATING VOLTAGE OF DEVICE USED IS 18 TO 31 VDC. THE RESULTING VOLTAGE DROP IS WITHIN THIS OPERATING RANGE.
2. PERMISSIBLE VOLTAGE DROP IS 10% OR LESS

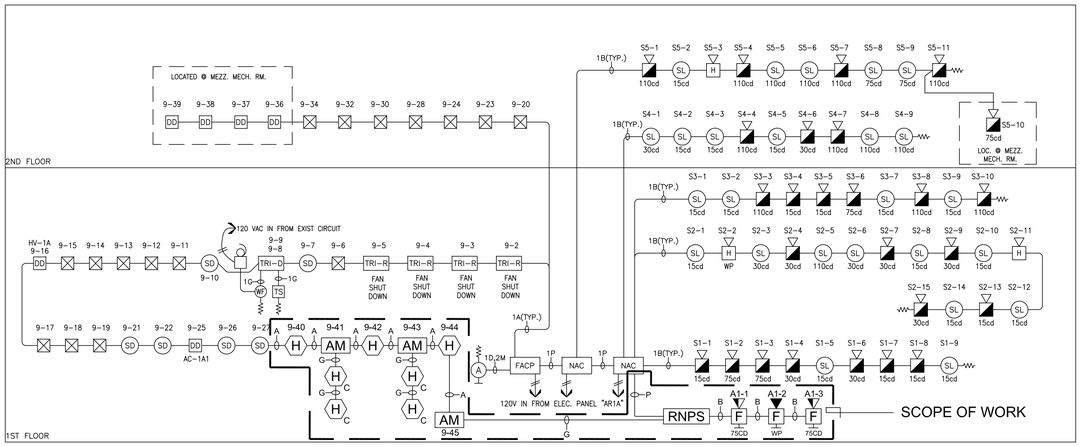

BUILDING #1
(E) FIRE ALARM RISER DIAGRAM

EXISTING FIRE ALARM RISER DIAGRAM

NOT TO SCALE

PS-12/24-8MP NAC PANEL No. 1		BATTERY CALCULATIONS		
SUPERVISORY CURRENT				
DESCRIPTION	QTY	DEVICE CURRENT	STAND BY CURRENT	ALARM CURRENT
PS-12/24-8MP NAC PANEL	1		0.075	0.075
TOTAL SUPERVISORY CURRENT			0.075	
TOTAL ALARM CURRENT				0.075
CKT#	TOTAL CIRCUIT LOAD			
A1	0.396			
SPARE	0			
SPARE	0			
SPARE	0			
TOTAL CKT ALARM CURRENT	0.396			

SUMMARY

A = TOTAL SUPERVISORY CURRENT x SUPERVISORY TIME REQUIRED
= 0.075 AMPS x 24 HR
= 1.800 AMP-HOUR

B = TOTAL ALARM CURRENT x ALARM TIME REQUIRED
= 0.396 AMPS + .075 AMPS x .083 HR
= 0.039 AMP-HOUR

C = A + B
= 1.839 AMP-HOUR

SUPERVISORY TIME REQUIRED----- 24 HR
ALARM TIME RQED----- 5 MINS. or .083 HR

BATTERY PROVIDED..... UB1270 (F1)
BATTERY SIZE..... 7.0 AMP-HOUR

TOTAL SYSTEM REQUIRED (A+B)
= 1.839 AMP-HOUR

BATTERY RESERVE AFTER 24 HOURS SUPERVISORY & 5 MINUTES ALARM = 5.161 AMP-HOUR

NOTE: HIGHLIGHTED ITEMS APPLY TO NEW SCOPE OF WORK and
FADED ITEMS ARE EXISTING SHOWN FOR REFERENCE ONLY.

THE DRAWING AND DESIGN HEREIN SHALL NOT BE DUPLICATED, USED OR DISCLOSED TO OTHERS FOR PROCUREMENT OR OTHER PURPOSE (EXCEPT AS OTHERWISE AUTHORIZED BY CONTRACT) WITHOUT WRITTEN PERMISSION OF SIEMENS BUILDING TECHNOLOGIES, INC., FIRE SAFETY DIVISION. ALL OTHER REPRODUCTIONS SHALL BEAR THIS NOTICE.

REVISIONS

No.	Revision	By	Date	Appr.

KEY PLAN

C10 STAMP:

DESIGNED BY:

IDeAS ...design facilities
INTEGRATED DESIGN ASSOCIATES INC
CONSULTING ELECTRICAL ENGINEERS
3140 De La Cruz Boulevard, Suite 110
Santa Clara, California 95054
tel: (408) 562-3560, fax: (408) 562-3561

CONTRACTOR'S NAME & ADDRESS:

CUPERTINO ELECTRIC
1132 N. Seventh Street
San Jose, CA 95112
TEL (408) 808-8135
FAX (408) 279-4605
California State C10 License No. 174637

PRODUCT MANUFACTURER:

SIEMENS
Building Technologies, Inc.
Fire Safety Division
SAN FRANCISCO BRANCH
25821 Industrial Boulevard, Suite 300
Hayward, California 94545-2991
Tel (510) 783-6000 Fax (510) 293-2100
California State C10 License No. 758796
U.L. Certificate ID No. 324787-001

JOB NAME & LOCATION (STREET ADDRESS)

CANADA COLLEGE

4200 FARM HILL BLVD.
REDWOOD CITY, CA 94061

ATHLETIC FIELD PROJECT
MODULAR BUILDINGS

SHEET CONTENTS:

WHEELOCK P.S. DETAILS/
RISER DIAGRAM

INSTALLATION TYPE
☒ NEW INSTALLATION
☐ DESIGN/BUILD
☒ PER CONTRACT DOCUMENT
☐ EXISTING BASE JOB # _____
☐ OTHERS _____

SYSTEM SALES REP.:	K. Rogers
PROJECT MANAGER:	K. Kudlik
DRAWN BY:	L.B.Terrado
CAD FILENAME:	04-PS.DWG
SCALE:	Not Applicable
DATE DRAWN:	September 30, 2005
ISSUE DATE:	September 29, 2005
SHEET	4 OF 6
JOB NUMBER	10-9084

IF DRAWING IS SMALLER THAN 30" X 42" IT IS A REDUCED COPY