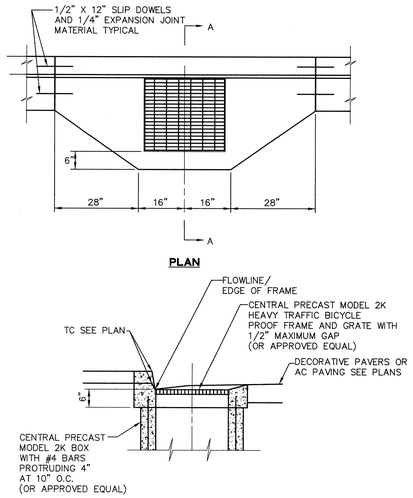

1 CATCH BASIN APRON

NTS

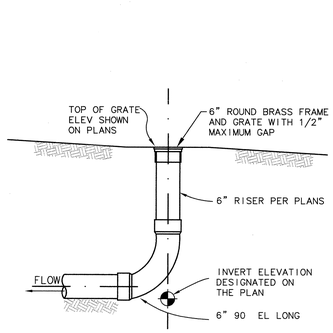

END OF LINE

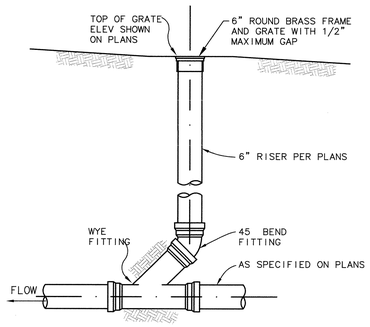

IN-LINE

NOTE:
1. ALL GRATES SHALL BE ADA COMPLIANT WITH 1/2" MAXIMUM OPENING.
2. AT LOCATIONS WHERE END OF LINE AREA DRAINS ARE WITHIN PROPOSED LANDSCAPING, A 12" X 12" CHRISTY MODEL 1290 WITH ATRIUM GATE SHALL BE INSTALLED. REFER TO LANDSCAPE DRAWINGS FOR DETAIL.

2 AREA DRAIN

NTS

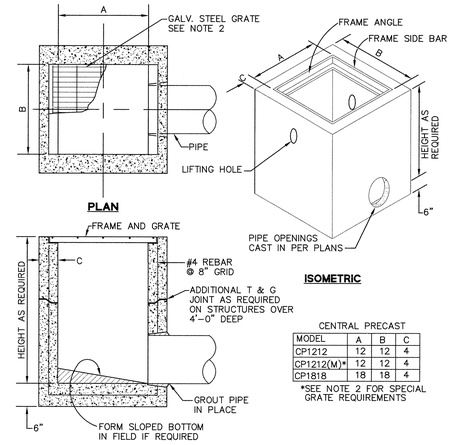

CENTRAL PRECAST

MODEL	A	B	C
CP1212	12	12	4
CP1212(M)*	12	12	4
CP1818	18	18	4

*SEE NOTE 2 FOR SPECIAL GRATE REQUIREMENTS

TYPICAL SECTION

NOTES :

1. CATCH BASIN SHALL BE CENTRAL PRECAST OR APPROVED EQUAL.
2. FRAMES AND GRATES SHALL BE STANDARD UNLESS DESIGNATED (M). GRATES DESIGNATED (M) SHALL BE NEENAH R-4990-CX TYPE P GRATE W/ MATCHING FRAME OR EQUAL.
3. AN ENGINEERED PRECAST DROP INLET UNIT CAN BE USED AS AN ALTERNATE.

3 CATCH BASINS FOR LANDSCAPE AREAS

NTS

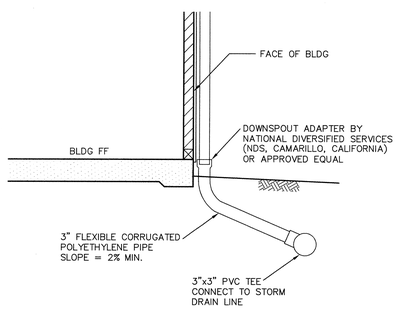

4 DOWNSPOUT CONNECTION TO AREA DRAIN LATERAL

NTS

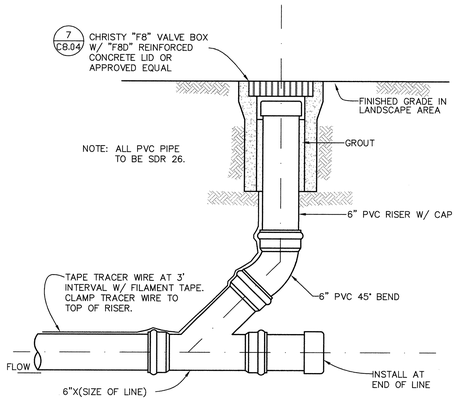

5 CLEANOUT

NTS

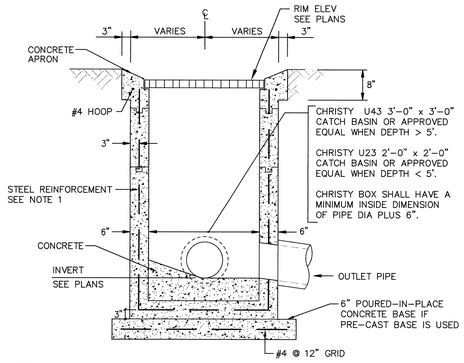

NOTES:

1. STEEL REINFORCEMENT: REINFORCEMENT SHALL CONSIST OF WIRE FABRIC CONFORMING TO ASTM SPECIFICATION A82, OR ASTM A496, OR WIRE FABRIC CONFORMING TO ASTM SPECIFICATION A185, OR SPECIFICATION A497, OR BARS OF GRADE 40 STEEL CONFORMING TO ASTM SPECIFICTION A615M.
2. FRAMES AND GRATES SHALL BE HOT DIPPED GALVANIZED POST FABRICATION PER ASTM SPECIFICATION A123-59.
3. FRAMES AND GRATES DESIGNED AND CERTIFIED TO BEAR FULL TRAFFIC LOADING CONDITIONS (AASHTO H-20 LOADING) AND SHALL BE THE BICYCLE PROOFING TYPE.
4. ALL GRATES SHALL BE ADA COMPLIANT WITH 1/2" MAXIMUM GAP.
5. AN ENGINEERED PRECAST DROP INLET UNIT CAN BE USED AS AN ALTERNATE.

6 DROP INLET

NTS

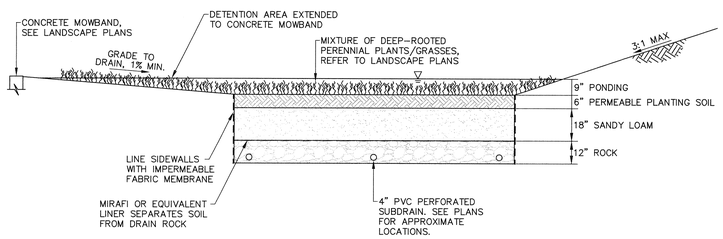

SECTION AT BIORETENTION BASIN
WEST SIDE OF BUILDING 10N

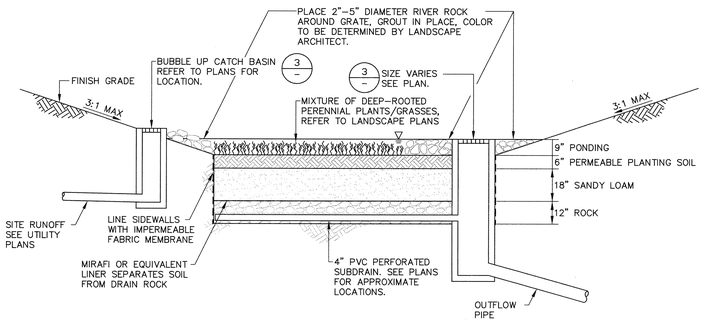

TYPICAL DETAIL

7 BIO-RETENTION BASIN

NTS

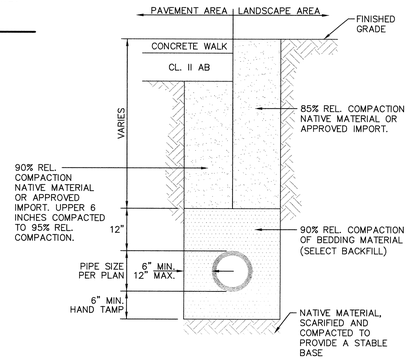

UTILITY TRENCH SECTION

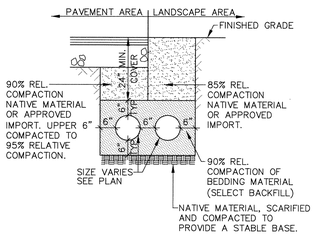

HYDRONIC PIPING TRENCH SECTION

NOTE:
1. PLACE CUT OFF PLUG OF IMPERMEABLE MATERIAL WHERE ALL TRENCHES ENTER A PAVEMENT AREA.

8 TRENCH DETAIL

NTS

McCarthy Building Companies, Inc.
343 Sansome Street, 14th Floor
San Francisco, California 94104
P 415 364-1339
F 415 397-5999

BKF ENGINEERS / SURVEYORS / PLANNERS
255 SHORELINE DRIVE, SUITE 200
REDWOOD CITY, CA 94065
PHONE: (650) 482-6300
FAX: (650) 482-6399

REGISTERED PROFESSIONAL ENGINEER RICHARD N. HOLT REG. NO. C043971 EXP. 6-30-09 CIVIL STATE OF CALIFORNIA

IDENTIFICATION STAMP
DIV. OF THE STATE ARCHITECT
OFFICE OF REGULATION SERVICE
APPL #: 01-110097
AC___ FLS DWG GS D-M
DATE APR 09 2009

FILE NUMBER:

This and all other project documents and all ideas, aesthetics and designs incorporated therein are instruments of service. All project documents are the registered property of LPA, INC. (LPA) and cannot be lawfully used in whole or in part for any project or purpose excepting that described to the LPA Consultants by the Owner/Client. The Owner/Client by LPA hereby gives formal notice that any such project document use, reproduction or modification (release) is not only unlawful but automatically binds all parties involved with reason to fully indemnify and defend LPA and LPA's Consultants to the maximum legal extent against all losses, demands, claims or liabilities resulting directly or indirectly from project document release. Project documents are instruments of service and are not a representation of as-built or existing conditions. LPA and LPA's Consultants make no representations concerning the accuracy of documents and are not responsible for any discrepancies between project documents and the existing conditions.

© Copyright 2008

College of San Mateo
Site Package
San Mateo, CA

Developed for
San Mateo County Community College District

Revision	Description	Date

Revision	Description	Date
	DSA SUBMITTAL	19 SEPT 2008
	DSA FINAL	09 APRIL 2009

Job. No.	27082.30
Date	09 APRIL 2009
Drawn by	MD, JT
Checked by	RH
Scale	AS SHOWN

CONSTRUCTION DETAILS

C8.03