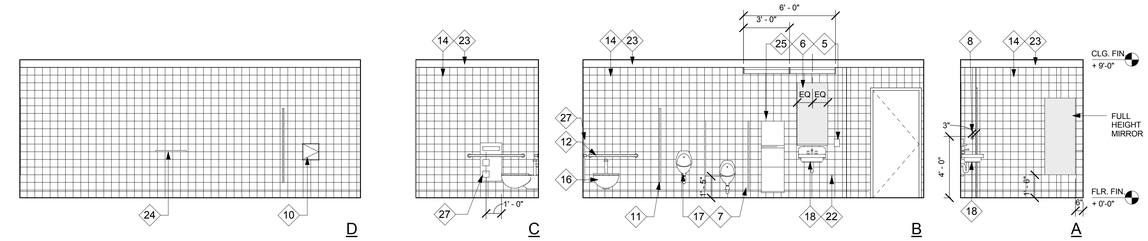

6 4-304 MEN'S RESTROOM ELEVATIONS

1/4" = 1'-0"

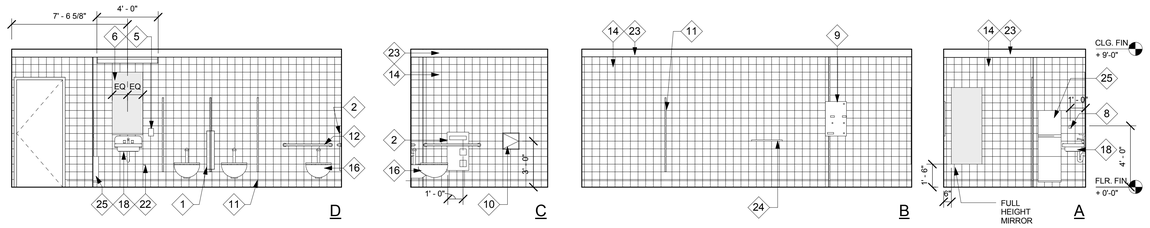

5 4-303 WOMEN'S RESTROOM ELEVATIONS

1/4" = 1'-0"

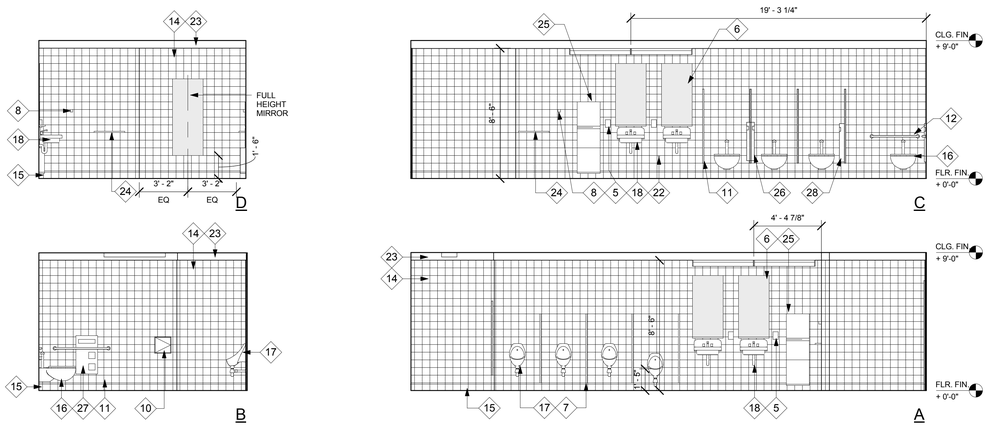

3 4-152 MEN'S RESTROOM ELEVATIONS

1/4" = 1'-0"

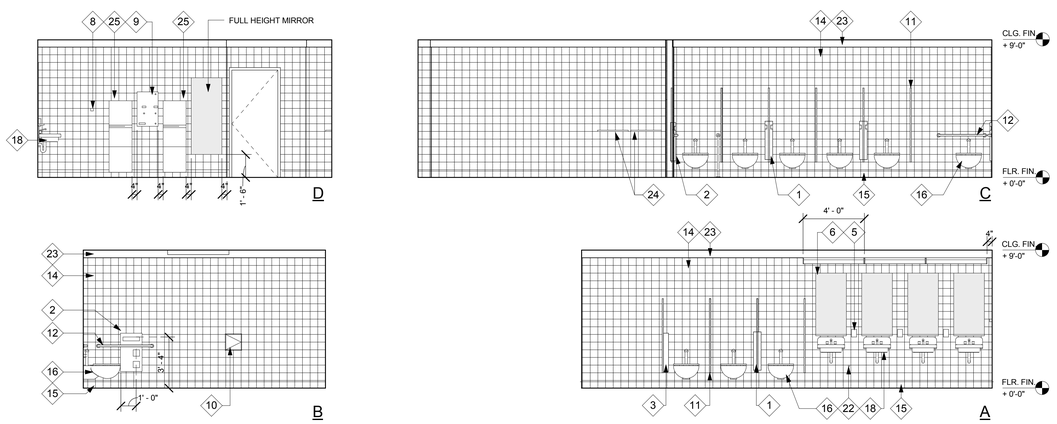

2 4-160 WOMEN'S RESTROOM ELEVATIONS

1/4" = 1'-0"

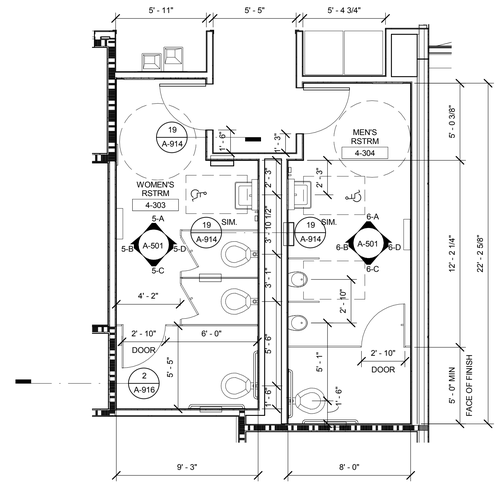

4 4-303/304 - RESTROOM PLAN

1/4" = 1'-0"

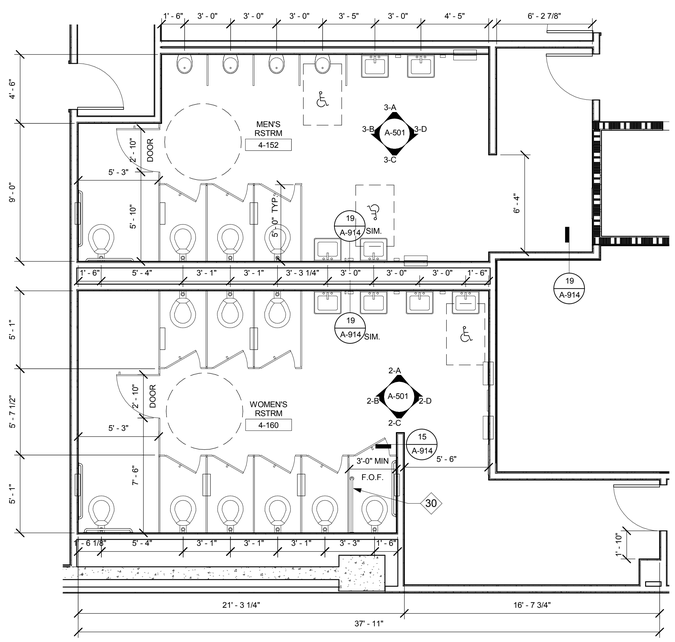

1 4-152/160 RESTROOM PLAN

1/4" = 1'-0"

GENERAL NOTES

1. AND SEE DETAILS 1 & 10/A-900 FOR ACCESSIBLE MOUNTING HEIGHTS CLEARANCE DIMENSIONS OF FIXTURES NOT SHOWN.
2. FOR FINISHES, SEE FINISH SCHEDULE ON SHEET AI-101,102&103
3. SEE 9/A-502 FOR TYPICAL CERAMIC TILE PATTERN.
4. CLOTHES HOOK AND BUMPER ON STALL DOORS AT 60" A.F.F. ON CENTER, AT 38"-40" A.F.F. FOR ADA WATER CLOSET.
5. SEE INTERIOR FINISH SCHEDULE SECTION 090020 FOR FINISHES
6. SEE 9/A-914 FOR TYP. TILE FLOOR - THINSET DETAIL.

KEY NOTES - RESTROOM

1. PARTITION MOUNTED SEAT COVER & TOILET TISSUE DISPENSERS
2. RECESSED SEAT COVER & TOILET TISSUE DISPENSERS
3. SURFACE MOUNTED SEAT COVER & TOILET TISSUE DISPENSERS
4. NOT USE
5. WALL MOUNTED SOAP DISPENSER
6. STAINLESS STEEL CHANNEL FRAME GLASS MIRROR/SHELF COMBINATION
7. WALL HUNG URINAL SCREEN
8. WALL/DOOR MOUNTED CONVENIENCE COAT HOOK
9. SANITARY NAPKIN/TAMPON VENDOR
10. ACCESS PANEL FOR WATER HAMMER ARRESTOR &T AP PRIMER, S.P.D. FOR LOCATION
11. OVERHEAD-BRACED TOILET PARTITION
12. 36" MIN. 1-1/2" DIAMETER GRAB BAR, SEE 5/A-900 FOR ANCHORAGE DETAIL
13. 42" MIN. 1-1/2" DIAMETER GRAB BAR, SEE 5/A-900 FOR ANCHORAGE DETAIL
14. CERAMIC TILE, SEE DETAIL 9/A-502
15. CERAMIC TILE COVED BASE
16. WALL MOUNTED TOILET, S.P.D.
17. WALL MOUNTED URINAL, S.P.D.
18. WALL-HUNG LAVATORY, SEE DETAIL 2/A-913 INSULATE DRAIN AND HOT WATER PIPE, S.P.D.
21. DRINKING FOUNTAIN, SEE 11/A-900
22. HOSE BIB
23. SEMIGLOSS PAINTED, GYPSUM TYP., SEE FINISH SCHEDULE
24. CONVENIENCE SHELF
25. SEMI-RECESS PAPER TOWEL DISPENSER AND WASTE CONTAINER
26. SAME AS 1
27. SAME AS 2
28. SAME AS 3
29. CORNER GUARD
30. WALL TO FLOOR GRAB BAR, SEE DETAIL 13/A-900

WRNS STUDIO LLP
501 SECOND STREET
4TH FLOOR, STE. 402
SAN FRANCISCO
CALIFORNIA 94107
415.489.2224 TEL
415.358.9100 FAX
WWW.WRNSSTUDIO.COM

Steinberg Architects

Hensel Phelps Construction Co.

NO.	ISSUES/REVISIONS	DATE

PROJECT RECORD SET

BUILDING 4
SKYLINE COLLEGE
SAN MATEO COUNTY COMMUNITY COLLEGE DISTRICT

CIP2 DESIGN-BUILD PROJECT
BUILDING 4

PROJECT NO.: 07012.00 DRAWN BY: BC
DATE: 05/06/08 CHECKED BY: LG
SCALE: 1/4" = 1'-0"

SHEET TITLE:
INTERIOR ELEVATION (RESTROOM)

SHEET NO:
A-501

All drawings and written material appearing herein constitute original and unpublished work of the Architect/Engineer and may not be duplicated, used or disclosed without consent of Architect/Engineer.

If this drawing is not 30"x42", then the drawing has been revised from its original size. Noted scales must be adjusted. This line should be equal to one inch