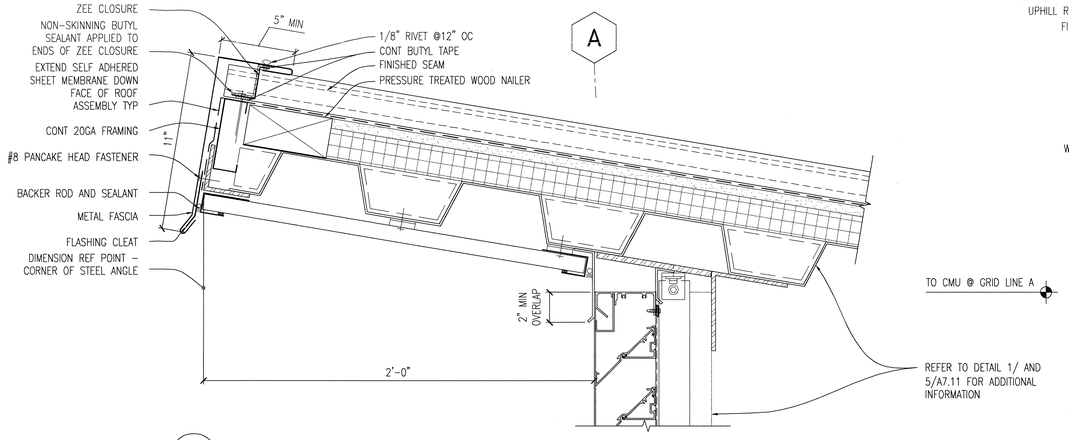

4 A7.11 ROOF RIDGE AT LOUVER DETAIL

3" = 1'-0"

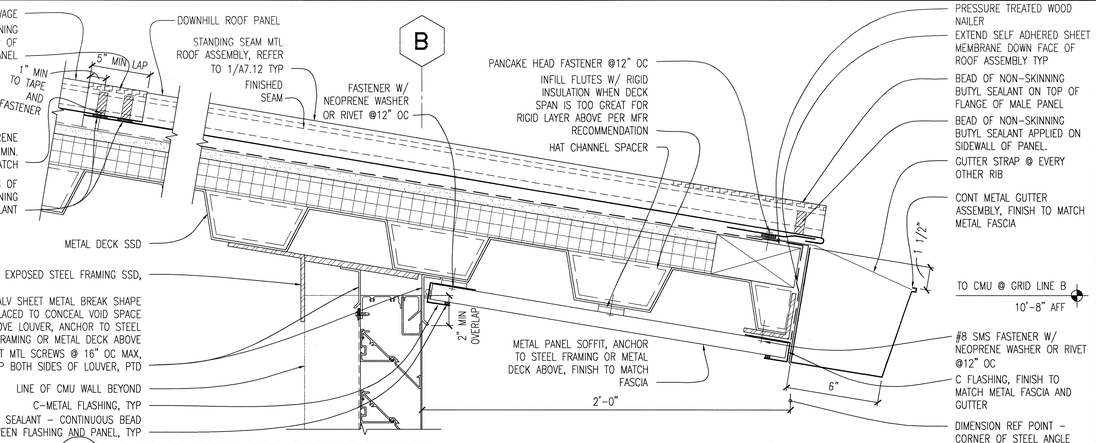

1 A7.11 ROOF EAVE AT LOUVER DETAIL

3" = 1'-0"

TYP C FLASHING PROFILE
NTS

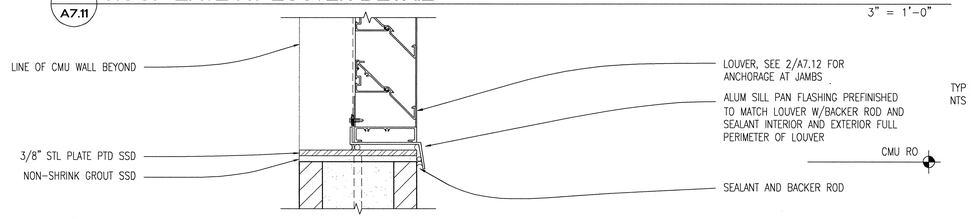

2 A7.11 LOUVER SILL DETAIL

3" = 1'-0"

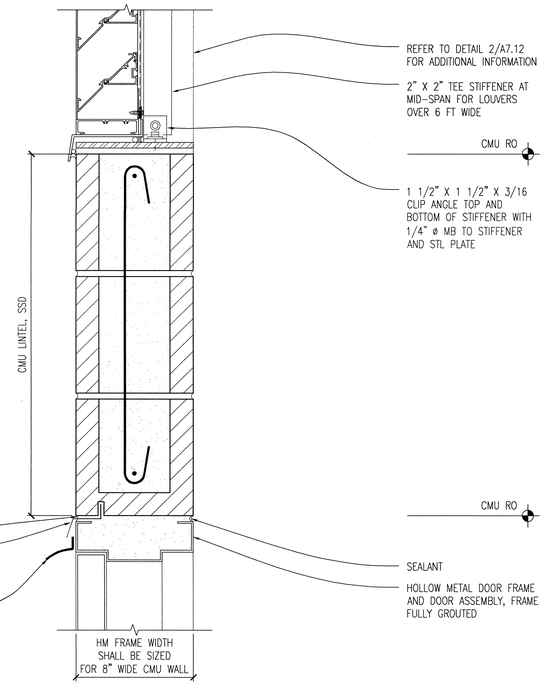

5 A7.11 DOOR HEAD AND LOUVER SILL DETAIL

3" = 1'-0"

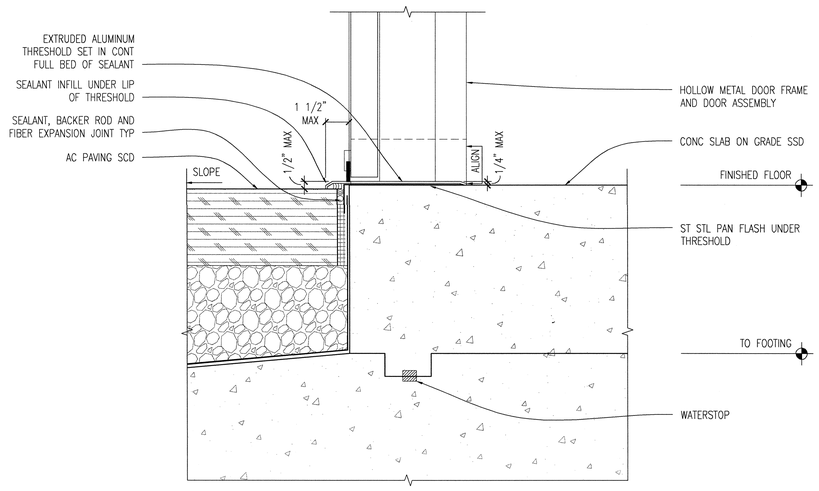

6 A7.11 HM DOOR THRESHOLD DETAIL

3" = 1'-0"

SHEET NOTES

1. APPLY PENETRATING SEALER TO INSIDE AND EXTERIOR EXPOSED SURFACES OF CMU AND CONCRETE INCLUDING SILL AND JAMB SURFACES AND ALL FACES OF EXTERIOR CONCRETE CURBS

2. PAINT ALL INTERIOR AND EXTERIOR EXPOSED STEEL AND METAL DECK

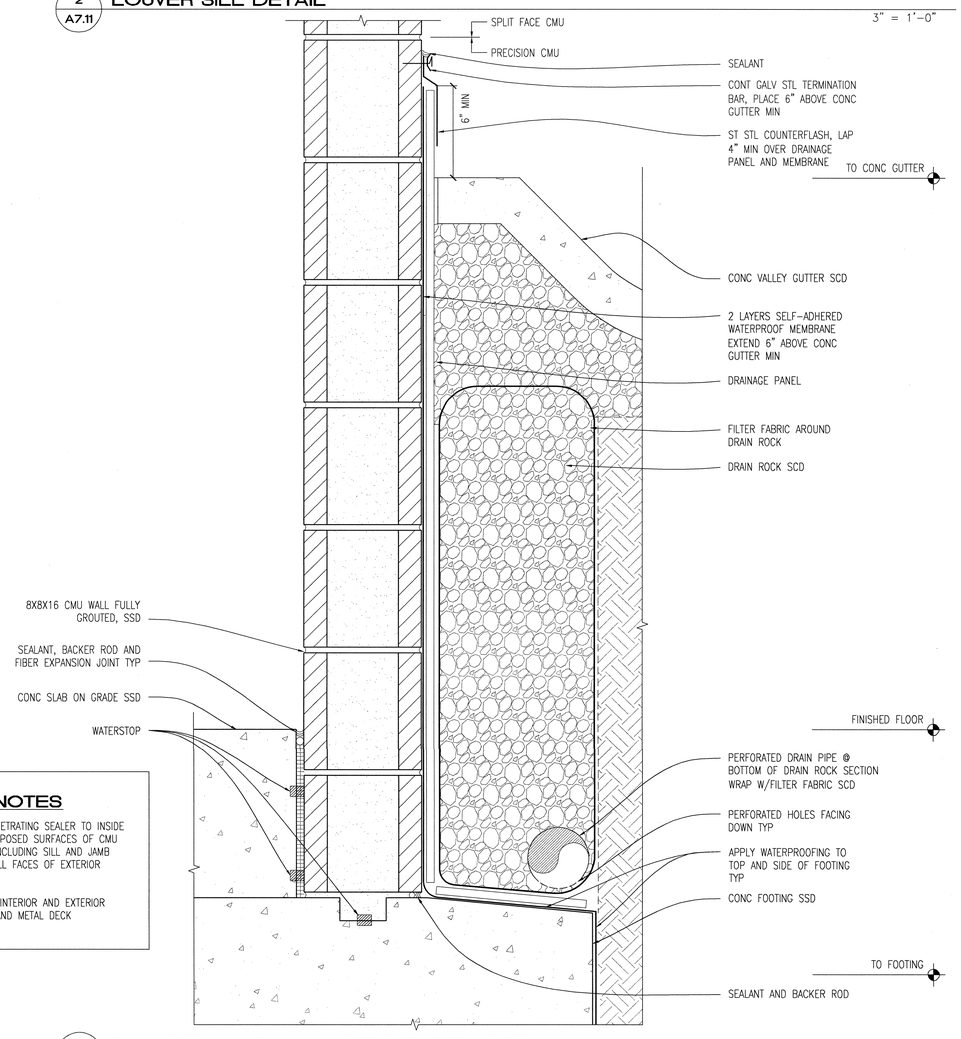

3 A7.11 CMU RETAINING WALL FOUNDATION DETAIL

3" = 1'-0"

noll & tam
architects and planners
729 Heinz Avenue
Berkeley, CA 94710
510.649.8295
fax 510.649.3008

IDENTIFICATION STAMP
DIVISION OF THE STATE ARCHITECT
APPLICATION NUMBER: 01-111618
AC RS AL
DATE: 2/9/11

CALIFORNIA STATE FIRE MARSHAL APPROVED

APPROVAL OF THIS PLAN DOES NOT AUTHORIZE OR APPROVE ANY OMISSION OR DEVIATION FROM APPLICABLE REGULATIONS. FINAL APPROVAL IS SUBJECT TO FIELD INSPECTION. ONE SET OF APPROVED PLANS SHALL BE AVAILABLE ON THE PROJECT SITE AT ALL TIMES.

REVIEWED BY: _____ DATE:

CAÑADA COLLEGE

Electrical Infrastructure Replacement Project

4200 Farm Hill Blvd
Redwood City, CA 94061

LICENSED ARCHITECT
CHRISTOPHER NOLL
REN: 12/31/11
C15416
STATE OF CALIFORNIA

BID SET

SHEET TITLE

Bldg 30– EXT DETAILS

REVISIONS

NO.	DATE	DESCRIPTION

DATE	January 14, 2011
DRAWN	TC/AL
CHECKED	MM
SCALE	AS NOTED
JOB NO.	2921.01

SHEET NUMBER

A7.11