Copyright 2005 Steinberg Architects All Rights Reserved – These Plans and/or Specifications are intended for the sole benefit of TSC's Client and may not be used, reused, copied, or reproduced in any form without the express written consent of Steinberg Architects.

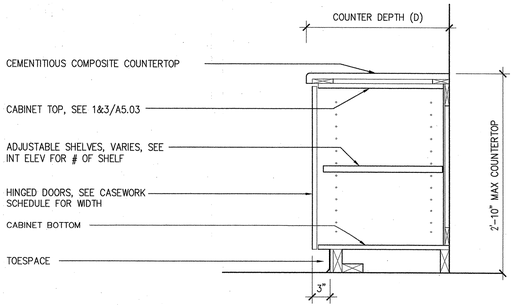

8 TYPICAL HINGED DOOR BASE CAB.

1" = 1'-0"

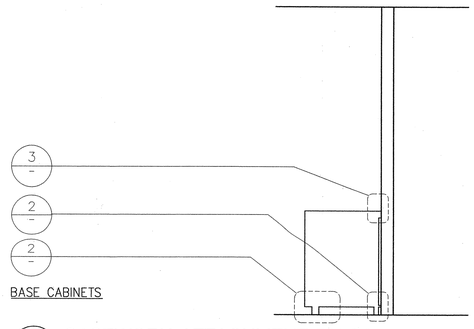

4 CASEWORK ATTACHMENT DIAGRAM

N.T.S.

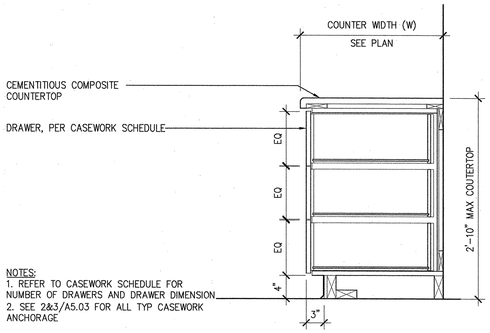

7 MULTI DRAWERS BASE CAB.

1" = 1'-0"

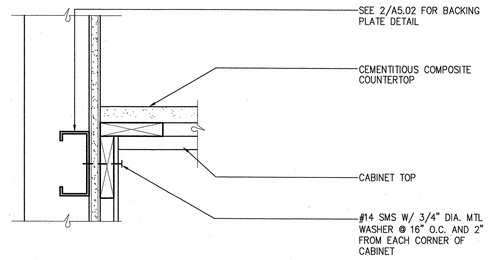

3 BASE CABINET ANCHORAGE AT TOP

SCALE: 3"=1'-0"

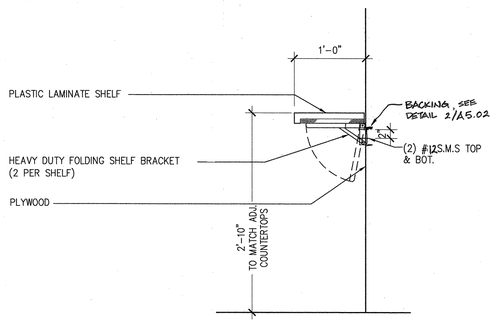

6 FOLDING SHELF

1" = 1'-0"

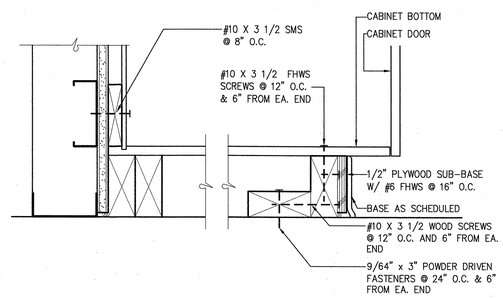

2 BASE CABINET ANCHORAGE

METAL STUD WALLS

SCALE: 3"=1'-0"

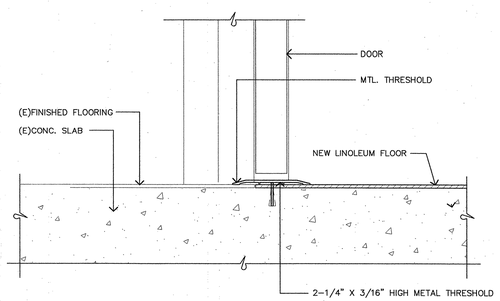

5 INTERIOR THRESHOLD

3" = 1'-0"

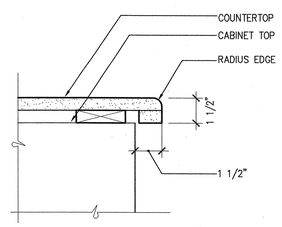

1 SOLID SURFACE COUNTERTOP

CEMENTITIOUS COMPOSITE

SCALE: 3"=1'-0"

GENERAL NOTES

A. FIXED CASEWORK IS FLOOR MOUNTED U.O.N.

B. ALL COUNTERTOPS TO BE FIBER CEMENT U.O.N.

C. CASEWORK DIMENSIONS INDICATED ON INTERIOR ELEVATION ARE NOMINAL SIZES, HEIGHT OF BASE CABINETS REFERS TO HEIGHT OF FINISHED BENCHTOP. SIZE CASEWORK HEIGHT TO ACHIEVE THIS DIMENSION. NO CASEWORK UNIT SHALL BE LESS THAN 12" WIDTH.

D. USE FILLER PANELS, AS REQUIRED, FOR GAPS BETWEEN WALLS, CASEWORK, FUME HOODS, AT CORNER CONDITIONS, AT EXPOSED ENDS BETWEEN WALLS AND CASEWORK UNITS AND AT ALL OTHER AREAS TO PROVIDE FINISHED ASSEMBLY.

E. PULL SIDE OF SWINGING DOORS SHALL BE TOWARDS BENCH END WHEN THE CABINET IS AT THE END OF THE BENCH. HINGED SIDE SHALL BE AT THE CORNER WHEN THE CABINET IS AT A CORNER CONDITION. THE HINGE MAY BE AT EITHER SIDE WHEN THE CABINET IS NOT AT AN END OR CORNER, UNLESS SWING IS NOTED ON INTERIOR ELEVATIONS, OR AS INDICATED ON RETURNED SUBMITTAL.

F. ALL COUNTERTOPS TO BE 34" A.F.F. U.O.N.

G. * REFER TO INTERIOR ELEVATIONS TO VERIFY CABINET WIDTH U.O.N.

H. ALL CASE WORK TO BE LAMINATE CLAD WOOD U.O.N. IN OPTIONS

KEYNOTES

01. COUNTER TOP
02. HINGED DOOR SOLID
03. TOESPACE W. RESILIENT BASE
04. DRAWERS
05. FOLD-DOWN SHELF
06. ADJUSTIBLE SHELF

CASEWORK SCHEDULE

TYPE	W*	H	D	DESCRIPTION	REMARK
ROOMS					
2111	3'	34"	22"	DOUBLE HINGED DOOR BASE CABINET	
	2'	34"	22"	THREE DRAWERS BASE CABINET	
	2'	34"	22"	SINGLE HINGED DOOR BASE CABINET	
2108					
WEST WALL	3'	34"	24"	DOUBLE HINGED DOOR BASE CABINET	
	2'	34"	24"	THREE DRAWERS BASE CABINET	
	2'	34"	24"	SINGLE HINGED DOOR BASE CABINET	
EAST WALL	3'	34"	22"	DOUBLE HINGED DOOR BASE CABINET	
	2'-6"	34"	22"	DOUBLE HINGED DOOR BASE CABINET	

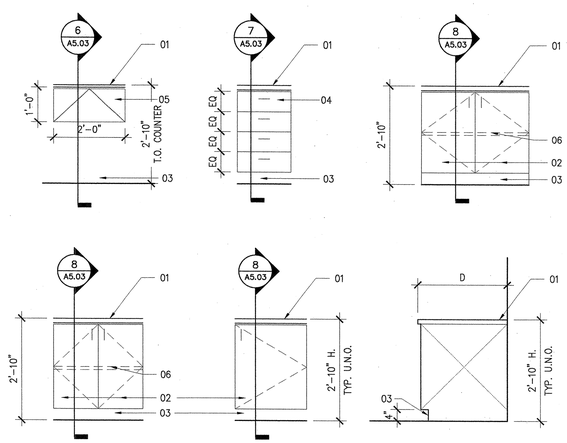

SKYLINE COLLEGE

TCOM CLASSROOM ALTERATION BUILDING 2

owner
SAN MATEO COUNTY
3401 CSM DRUVE
SAN MATEO CA 94402

architect
STEINBERG ARCHITECTS
60 Pierce Avenue
San Jose CA 95110

LICENSED ARCHITECT ERNEST T. YAMAME No. C-3447 EXP. 12/31/07 STATE OF CALIFORNIA

IDENTIFICATION STAMP
DIV. OF THE STATE ARCHITECT
APPL. # 01-108576
AC. RS FLS. DM SSC
DATE 3-14-07

rev.	date	issue
	02.02.07	DSA SUBMITTAL
	03.14.07	DSA BACKCHECK

STEINBERGARCHITECTS

project no: 06044 date: 02-02-07
drawn by: JC checked by: RS
scale: AS NOTED

CASEWORK DETAILS & MISC. DETAILS

A5.03