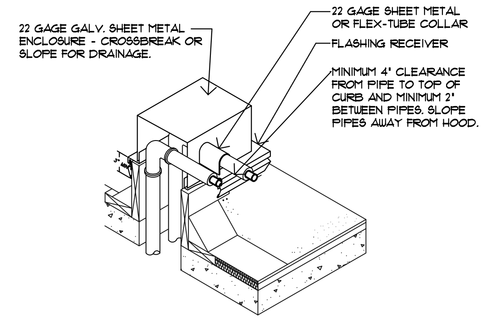

PIPE THROUGH ROOF DETAIL | 12

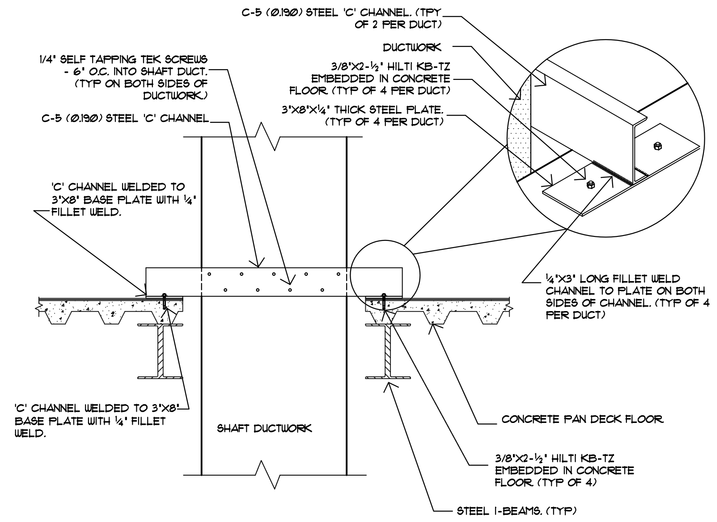

SHAFT SUPPORT DETAIL | 9

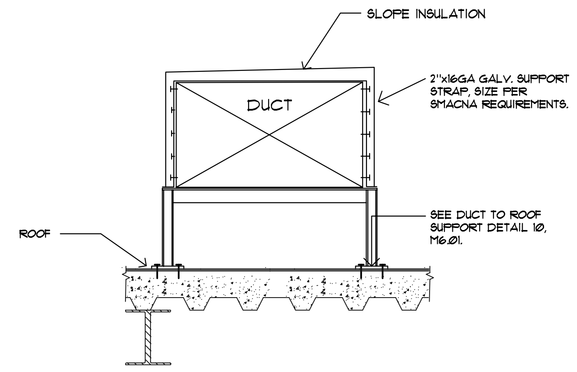

TYPICAL DUCT SUPPORT ON ROOF | 5

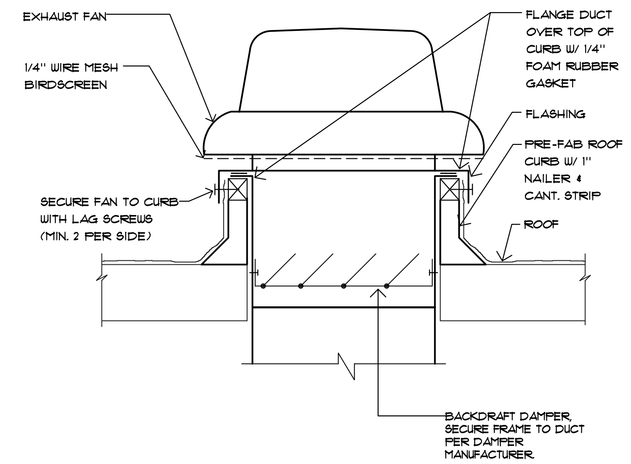

EF-6 MOUNTING DETAIL | 1

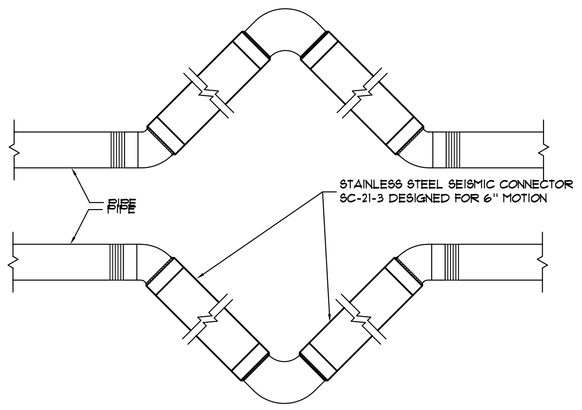

PIPING FLEX CONNECTOR AT SEISMIC JOINT | 13

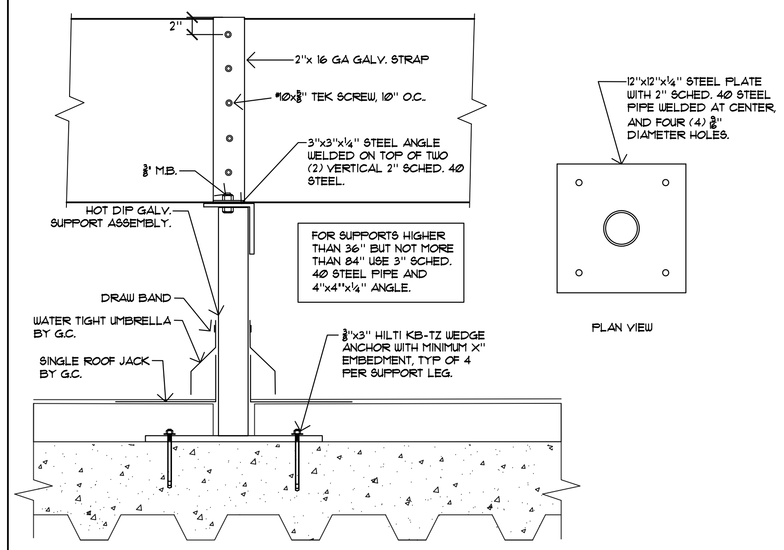

DUCT TO ROOF SUPPORT DETAIL | 10

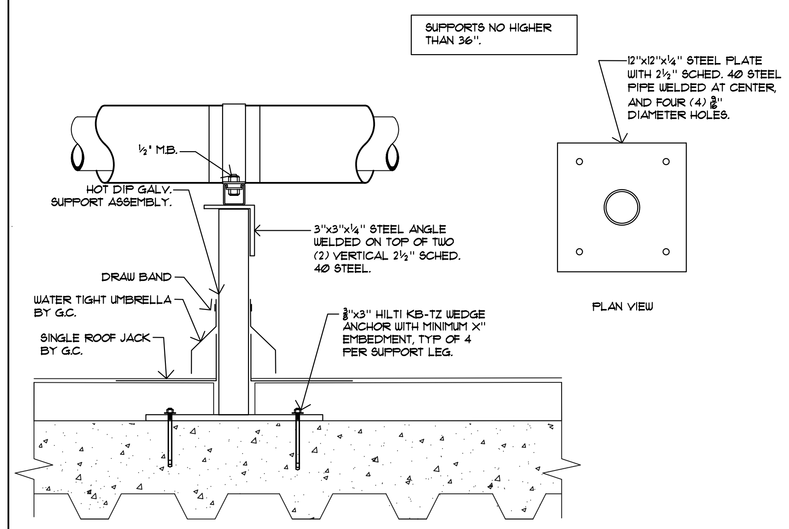

PIPE SUPPORT ON ROOF DETAIL | 6

-

| 2

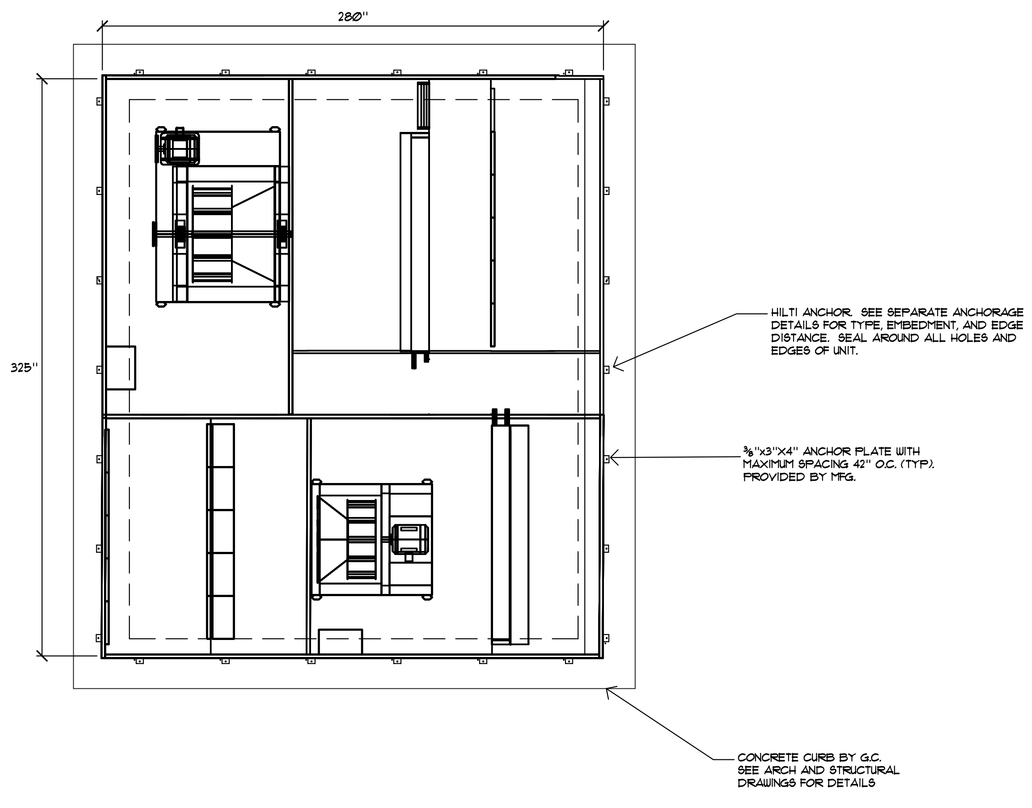

AHU MOUNTING DETAIL REQUIREMENTS | 11

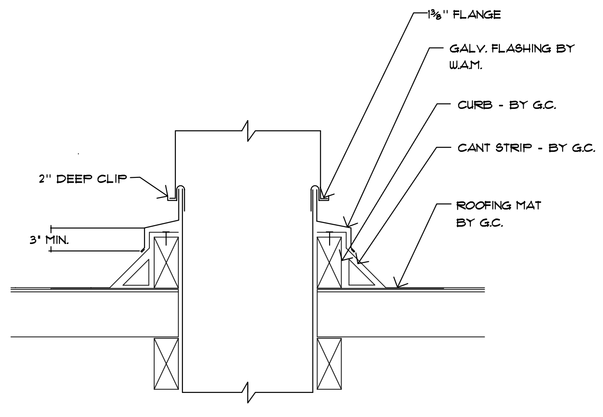

DUCT THROUGH ROOF DETAIL | 7

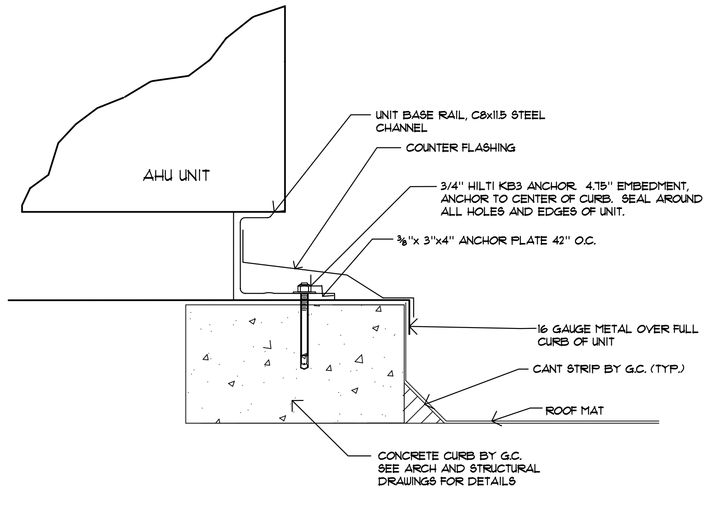

AIR HANDLER ATTACHMENT DETAIL | 8

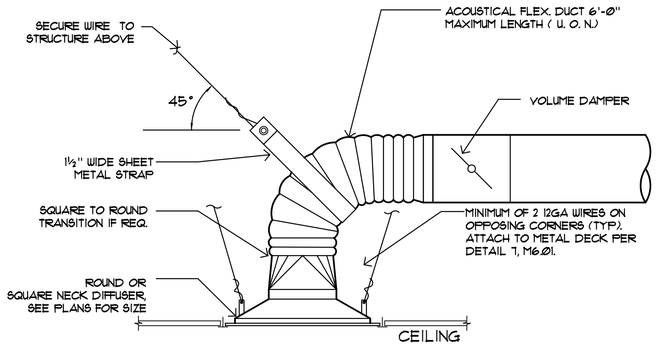

NOTE:

1. ALL FLEX. DUCT CONNECTIONS SHALL BE 6 FT MAX
2. RETURN & EXHAUST AIR GRILLES SIMILAR.

CEILING DIFFUSER MOUNTING | 3

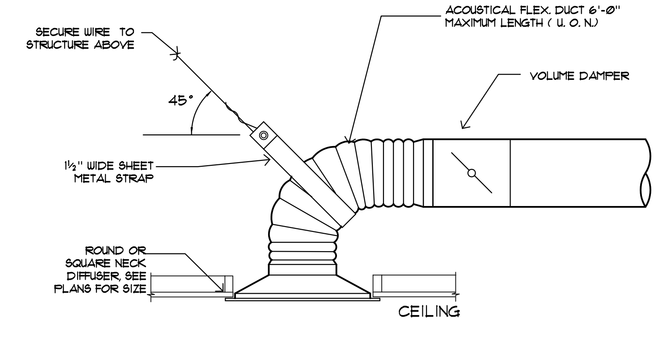

NOTE:

1. ALL FLEX. DUCT CONNECTIONS SHALL BE 6 FT MAX
2. RETURN & EXHAUST AIR GRILLES SIMILAR.

HARD CEILING DIFFUSER MOUNTING | 4

McCARTHY LPA KH

McCarthy Building Companies, Inc.
343 Sansome Street, 14th Floor
San Francisco, California 94104
P 415 |364-1339
F 415 |397-5999

IDENTIFICATION STAMP
DIVISION OF THE STATE ARCHITECT
APPL. 01 —
ACC____ FLS____ SS____
DATE_____

REGISTERED PROFESSIONAL ENGINEER
LAURENS VANDELAY
NO. 27606
EXP. DATE: 06/30/09
MECHANICAL
STATE OF CALIFORNIA

WESTERN ALLIED MECHANICAL INC
MECHANICAL CONTRACTORS
1580 O'BRIEN DRIVE
MENLO PARK, CA 94025
(650) 324-6750
(650) 321-4546 FAX
STATE CONTRACTOR LICENSE NO. 826782

This design is the exclusive property of Western Allied Mechanical, Inc. The drawings and blueprints containing this design are and shall remain the property of Western Allied Mechanical, Inc. The delivery of the original prints or copies thereof does not constitute a publication thereof.

These drawings or blueprints are exhibited to you solely for the purpose of transacting a sale by Western Allied Mechanical, Inc. of the mechanical system incorporated in the design. Any communication of this design without the written consent of Western Allied Mechanical, Inc. constitutes a violation of the laws of this State.

College of San Mateo
Building 5N
DSA Submittal
San Mateo, CA
Developed for College of San Mateo

Revision	Description	Date

Revision	Description	Date

Job. No.	118051
Date	June 13 2008
Drawn by	RJ
Checked by	LV
Scale	SEE DRAWING

MECHANICAL DETAILS

M6-01