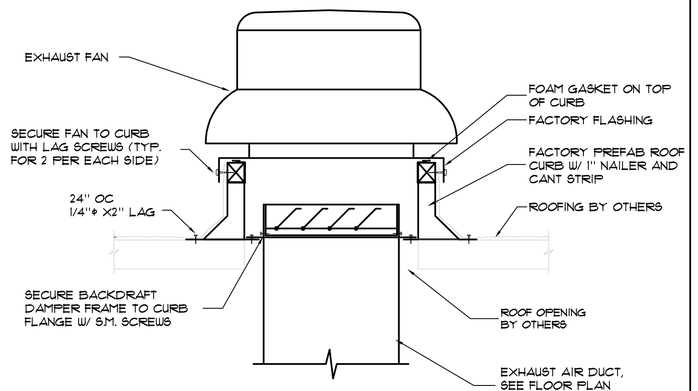

MUSHROOM EXHAUST FAN ON ROOF | 1

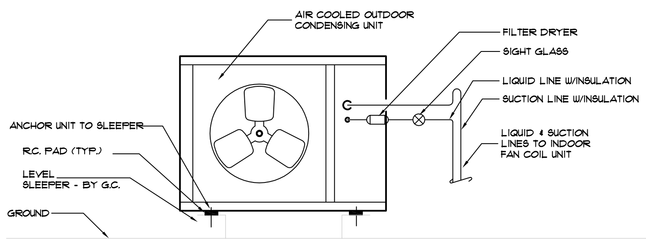

CONDENSING UNIT MOUNTING DETAIL | 2

CERTIFICATE OF COMPLIANCE (Part 1 of 3) MECH-1-C

PROJECT NAME: CSM AQUATICS CENTER, EQUIPMENT BUILDING	DATE: 09/19/08
PROJECT ADDRESS: 11900 W. Hillsdale Blvd. San Mateo, Ca 94402	Building Permit
PRINCIPAL DESIGNER-MECHANICAL: WESTERN ALLIED MECHANICAL - ROBERT JOHNSON — TELEPHONE: (650)326-0750	
DOCUMENTATION AUTHOR: WESTERN ALLIED MECHANICAL - ROBERT JOHNSON — TELEPHONE: (650)326-0750	Checked by/Date Enforcement Agency Use

GENERAL INFORMATION

DATE OF PLANS: 09/19/08 | BUILDING CONDITIONED FLOOR AREA: 1565 SQ.FT. | CLIMATE ZONE: 3

BUILDING TYPE: ☒ NONRESIDENTIAL ☐ HIGH RISE RESIDENTIAL ☐ HOTEL MOTEL GUEST ROOM

PHASE OF CONSTRUCTION: ☐ NEW CONSTRUCTION ☐ ADDITION ☒ ALTERATION ☐ UNCONDITIONED (file affidavit)

PROOF OF ENVELOPE COMPLIANCE: ☒ PREVIOUS ENVELOPE PERMIT ☐ ENVELOPE COMPLIANCE ATTACHED

STATEMENT OF COMPLIANCE

This Certificate of Compliance lists the building features and performance specifications needed to comply with Title 24, Parts 1 and 6 of the California Code of Regulations. This certificate applies only to building mechanical requirements.

The documentation preparer hereby certifies that the documentation is accurate and complete.

DOCUMENTATION AUTHOR	SIGNATURE	DATE
ROBERT JOHNSON		09/19/08

The Principal Mechanical Designer hereby certifies that the proposed building design represented in this set of construction documents is consistent with the other compliance forms and worksheets, with the specifications, and with any other calculations submitted with this permit application. The proposed building has been designed to meet the mechanical requirements contained in the applicable parts of Sections 100, 101, 102, 110 through 115, 120 through 125, 142, 144 and 145.

✔
- ☒ The plans & specifications meet the requirements of part 6 (Sections 10-103a).
- ☒ The installation certificates meet the requirements of Part 6 (10-103a 3).
- ☒ The operation & maintenance information meets the requirements of Part 6 (10-103c).

Please check one: (These sections of the Business and Professions Code are printed in full in the Nonresidential Manual.)

- ☐ I hereby affirm that I am eligible under the provisions of Division 3 of the Business and Professions Code to sign this document as the person responsible for its preparation; and that I am licensed in the State of California as a civil engineer or mechanical engineer, or I am a licensed architect.
- ☒ I affirm that I am eligible under the exemption to Division 3 of the Business and Professions Code by Section 5537.2 or 6737.3 to sign this document as the person responsible for its preparation; and that I am a licensed contractor performing this work.
- ☐ I affirm that I am eligible under the exemption to Division 3 of the Business and Professions Code to sign this document because it pertains to a structure or type of work described pursuant to Business and Professions Code sections 5537, 5538 and 6737.1.

PRINCIPAL MECHANICAL DESIGNER-NAME	SIGNATURE	DATE	LIC. #
ROBERT JOHNSON		09/19/08	826782

INSTRUCTIONS TO APPLICANT MECHANICAL COMPLIANCE & WORKSHEETS (check box if worksheet is included)

☒ MECH-1-C	Certificate of Compliance. Part 1 of 3, 2 of 3, 3 of 3 are required on plans for all submittals
☐ MECH-2-C	Certificate of Compliance. Part 1 of 3, 2 of 3, 3 of 3 are required for all submittals, but may be on plans.
☐ MECH-3-C	Certificate of Compliance are required for all submittals with mechanical ventilation, but may be on plans.
☐ MECH-4-C	Certificate of Compliance are required for all prescriptive submittals, but may be on plans.

2005 Nonresidential Compliance Forms — October 2005

CERTIFICATE OF COMPLIANCE (Part 2 of 3) MECH-1-C

PROJECT NAME: CSM AQUATICS CENTER, EQUIPMENT BUILDING — DATE: 09/19/08

Designer:

This form is to be used by the designer and attached to the plans. Listed below are all the acceptance tests for mechanical systems. The designer is required to check the boxes by all acceptance tests that apply and list all equipment that requires an acceptance test. If all equipment of a certain type requires a test, list the equipment description and the number of systems to be tested in parentheses. The NJ number designates the Section in the Appendix of the Nonresidential ACM Manual that describes the test. Also indicate the person responsible for permorning the tests (i.e. the installing contractor, design professional or an agent selected by the owner). Since this form will be part of the plans, completion of the section will allow the responsible party to budget for the scope of work appropriately.

Building Departments:

Systems Acceptance Before occupancy permit is granted for a newly constructed building or space, or a new space-conditioning system serving a building or space is operated for normal use, all control devices serving the building or space shall be certified as meeting the Acceptance Requirements for Code Compliance.

In addition a Certificate of Acceptance, Mech-1-A, Form shall be submitted to the building department that certifies plans, specifications, installation certificates, and operating and maintenance information meet the requirements of §10-103(b) and Title 24, Part 6.

Test Description	Test Performed By:
✔ ☐ MECH-2-A: Ventilation System Acceptance Document • Variable Air Volume Systems Outdoor Air Acceptance • Constant Air Volume Systems Outdoor Air Acceptance Test required on all New systems both New Construction and Retrofit. Equipment requiring acceptance testing N/A	
✔ ☐ MECH-3-A: Packaged HVAC System Acceptance Document Test required on all New packaged systems both New Construction and Retrofit. Equipment requiring acceptance testing N/A	
✔ ☐ MECH-4-A: Air Side Economizer Acceptance Document Test required on all new air-side economizers for both New Construction and Retrofit. Units with economizers that are installed at the factory and certified with the Commision do not require equipment testing but do require construction inspection. Equipment requiring acceptance testing N/A	

2005 Nonresidential Compliance Forms — October 2005

CERTIFICATE OF COMPLIANCE (Part 3 of 3) MECH-1-C

PROJECT NAME: CSM AQUATICS CENTER, EQUIPMENT BUILDING — DATE: 09/19/08

Test Description	Test Performed By:
✔ ☐ MECH-5-A: Air Distribution Acceptance Document This test required if the unit serves 5000 ft²of space or less and 25% or more of the ducts are in nonconditioned or semiconditioned space like an attic. New systems that meet the above requirements. Retrofit systems that meet the above requirements and either extend ducts, replace ducts or replace the packaged unit. Equipment requiring acceptance testing N/A	
✔ ☐ MECH-6-A: Demand Control Ventilation Acceptance Document All new DCV controls installed on new or existing packaged systems must be tested. Equipment requiring acceptance testing N/A	
✔ ☐ MECH-7-A: Supply Fan Variable Flow Control Acceptance Document All new VAV fan volume controls installed on new or existing systems must be tested. Equipment requiring acceptance testing N/A	
✔ ☐ MECH-8-A: Hydronic System Control Acceptance Document • Variable Flow Controls, Applies to chilled and hot water systems. • Automatic Isolation Controls Applies to new boilers and chillers and the primary pumps are connected to a common header. • Supply Water Temperature Reset Controls, Applies to new constant flow chilled and hot water systems that have a design capacity greater than or equal to 500,000 Btu/hr. • Water-loop Heat Pump Controls, Applies to all new waterloop heat pump systems where the combined loop pumps are greater than 5 hp. • Variable Frequency Control, Applies to all new distribution pumps on new variable flow chilled, hydronic heat pump or condenser water systems where the pumps motors are greater than 5 hp. Equipment requiring acceptance testing N/A	

2005 Nonresidential Compliance Forms — October 2005

SHEET INDEX

M 0.1	DRAWING SCHEDULE, TITLE 24, LEGENDS AND NOTES

TITLE-24 ENERGY EFFICIENCY STANDARDS FOR NON-RESIDENTIAL BUILDINGS

MANDATORY REQUIREMENTS

NOTE: SECTION NUMBERS REFER TO TITLE-24 REGULATIONS UNLESS NOTED OTHERWISE.

MANUFACTURER'S REQUIREMENTS SET FORTH IN SECTIONS 111 & 112 FOR APPLIANCES AND HVAC EQUIPMENT EFFICIENCY AND PACKAGE CONTROLS SHALL APPLY.

[X] A. THE MANUFACTURER HAS CERTIFIED THAT THE EQUIPMENT COMPLIES WITH THE APPLICABLE MANUFACTURER PROVISIONS OF SECTION 111 THROUGH 119.

[X] SECTION 115: NATURAL GAS EQUIPMENT OR APPLIANCES SHALL NOT BE EQUIPPED WITH A CONTINUOUSLY BURNING PILOT LIGHT, INCLUDING FURNACES AND SPACE HEATERS BUT NOT LIMITED THERETO.

[X] CONTROL EQUIPMENT CERTIFICATION:

A. AUTOMATIC TIMER SWITCHES SHALL BE INSTALLED PER SECTION 119(C).
B. OCCUPANCY SENSORS SHALL BE INSTALLED PER SECTION 119(D).
C. DEMAND VENTILATION CONTROLS CAN BE INSTALLED PER SECTION 121(C), IF APPLICABLE, TO TAKE EXCEPTION TO MINIMUM OUTDOOR VENTILATION REQUIREMENTS.

[X] SECTION 121: VENTILATION REQUIREMENTS:

A. VENTILATION RATES OF OUTDOOR AIR SHALL MEET THE REQUIREMENTS OF SECTION 121.
B. DESIGN REQUIREMENTS OF SECTION 121(B) SHALL BE INCORPORATED.
C. OPERATING AND CONTROL REQUIREMENTS OF SECTION 121(C) SHALL BE ADHERED TO.
D. OUTDOOR AIR SHALL BE PROVIDED AS SPECIFIED IN SECTION 121(D).
E. AIR BALANCE AND CERTIFY DESIGN OUTDOOR AIR QUANTITIES AS SPECIFIED IN SECTION 121(E).

[X] SECTION 122: CONTROLS FOR SPACE CONDITIONING SYSTEMS:

A. EACH ZONE AS SET FORTH IN SECTION 122(A) SHALL HAVE AN INDIVIDUAL HEATING AND COOLING THERMOSTAT.
B. THERMOSTATS SECTION 122(B):
WHEN USED FOR HEATING SHALL BE CAPABLE OF ADJUSTMENT DOWN TO 55° F OR LOWER.
WHEN USED FOR COOLING SHALL BE CAPABLE OF ADJUSTMENT UP TO 85° F OR HIGHER.
WHEN USED FOR BOTH HEATING AND COOLING SHALL BE CAPABLE OF A DEAD BAND TEMPERATURE RANGE OF 5° F BETWEEN HEATING AND COOLING.
C. SET BACK OR SET UP CONTROLS SHALL BE AS DESCRIBED IN SECTION 122(E).
D. CONTROLS SHALL AUTOMATICALLY SHUT OFF SYSTEM DURING PERIODS OF NON-USE PER SECTION 122(F).
E. DAMPERS FOR SUPPLY AND EXHAUST AIR SHALL BE INSTALLED TO CLOSE DURING PERIODS OF NON-USE PER SECTION 122 (F).

[X] SECTION 123: PIPE INSULATION:

PIPE INSULATION SHALL BE INSTALLED PER SECTION 123 REFER TO TABLE 1-G FOR STANDARDS FOR INSULATION THICKNESS OF PIPES USING FIBERGLASS OR FOAM INSULATION, USE EQUATION 1-A FOR INSULATION THICKNESS OF OTHER INSULATING MATERIALS.

INSULATION MAY BE OMITTED FOR THE FOLLOWING EXCEPTIONS:

A. FACTORY INSTALLED PIPING WITHIN CERTIFIED EQUIPMENT.
B. PIPING CONVEYING FLUIDS WITH AN OPERATING RANGE TEMPERATURE RANGE OF BETWEEN 60° F TO 105° F.
C. PIPING SERVING PROCESS LOADS.
D. PIPING WHERE THE HEAT GAIN OR LOSS WILL NOT INCREASE THE BUILDING SOURCE ENERGY USE.

[X] SECTION 124: DUCT CONSTRUCTION AND INSULATION:

DUCTS SHALL BE CONSTRUCTED, INSTALLED AND INSULATED PER CHAPTER 6 OF THE 2007 CALIFORNIA MECHANICAL CODE (CMC) AND TITLE 24 STANDARDS.

A. DUCT MATERIALS AND JOINTING SHALL BE IN ACCORDANCE WITH CHAPTER 6 OF THE 2007 CMC. DUCT SEALING SHALL BE IN ACCORDANCE WITH SMACNA HVAC DUCT CONSTRUCTION STANDARDS METAL AND FLEXIBLE 1999. PRESSURE SENSITIVE TAPE SHALL NOT BE THE PRIMARY SEALANT ON DUCTS WITH A DESIGN OPERATING STATIC PRESSURE EXCEEDING 1" WATER COLUMN.
B. DUCT INSTALLATION SHALL BE IN ACCORDANCE WITH CHAPTER 6 OF THE 2007 CMC.
C. DUCT INSULATION SHALL BE IN ACCORDANCE WITH TITLE 24 STANDARDS.

GRAVITY VENTILATOR SCHEDULE

NO.	MANUFACTURER & MODEL NO.	TYPE	THROAT SIZE	AREA	HEIGHT	SERVICE	OPER. WGT.	REMARKS
GV 1	GRAINGER 2C533	TURBINE VENTILATOR	16"ø	1.45 SQ.FT.	21¾"	EQUIPMENT ROOM	40 LBS.	W/ ADJUSTABLE BASE

EXHAUST FAN SCHEDULE

NO.	MANUFACTURER & MODEL NO.	TYPE	SERVICE	CFM	ESP	RPM	ROOF OPENING	BHP	HP	VOLTAGE	OPER. WT. LBS.	REMARKS
EF 1	GREENHECK G	MUSH ROOM	ACID ROOM	130	0.2	1300	10.5"x10.5"	0.01	1/60	115V/60HZ/3ø	40	FACTORY ROOF CURB, ELECTRICAL DISCONECT, BACKDRAFT DAMPER, & BIRD SCREEN.
EF 2	GREENHECK G	MUSH ROOM	CHLORINE ROOM	130	0.2	1300	10.5"x10.5"	0.01	1/60	115V/60HZ/3ø	40	FACTORY ROOF CURB, ELECTRICAL DISCONECT, BACKDRAFT DAMPER, & BIRD SCREEN.
EF 3	GREENHECK G	MUSH ROOM	CHLORINE ROOM	130	0.2	1300	10.5"x10.5"	0.01	1/60	115V/60HZ/3ø	40	FACTORY ROOF CURB, ELECTRICAL DISCONECT, BACKDRAFT DAMPER, & BIRD SCREEN.

SPLIT SYSTEM HEAT PUMP CONDENSER SCHEDULE

NO.	MANUFACTURER & MODEL NO.	AMB.	COOLING CAP. @ 72°F DB/60°F WB (BTU/HR)	INTEGRATED HEATING CAP.				ELECTRICAL DATA			OPER. WT. (LBS.)	REMARKS
				AMB.°F	EDB°F	MBH	HSPF	MCA	MOCP	VOLTAGE		
CU 1	MITSUBISHI MUZ-A12NA	84	12,000 TOTAL	38	70	13.6	8.2	12	15	208/230V 1ø/60Hz	100	INSULATE SUCTION AND LIQUID LINE SEPERATLY

SPLIT SYSTEM HEAT PUMP CONDENSER SCHEDULE

NO.	MANUFACTURER & MODEL NO.	SERVICE	FAN DATA			FILTERS			ELECTRICAL DATA		OPER. WT. (LBS.)	REMARKS
			CFM	ESP	HP	QTY	EFF	SIZE	MCA	VOLTAGE		
FC 1	MITSUBISHI MSZ-A12NA	CONCESSIONS	353	0.3	-	-	-	-	12	208/230V 1ø/60Hz	30	WITH CONDENSATE PUMP AND WIRELESS REMOTE CONTROLLER. SPACE SERVED BY NATURAL VENTILATION

AIR SYSTEM REQUIREMENTS (Part 1 of 3) MECH-2-C

PROJECT NAME: CSM AQUATICS CENTER, EQUIPMENT BUILDING — DATE: 09/19/08

ITEM or SYSTEM TAG(S)		AIR SYSTEMS, Central or Single Zone					
		FC/CU-1					
MANDATORY MEASURES	T-24 Section	Reference on Plans or Specification[1]					
Heating Equipment Efficiency	112(a)	M0.1					
Cooling Equipment Efficiency	112(a)	M0.1					
Heat Pump Thermostat	112(b)	M0.1					
Furnace Controls	112(c), 115(a)	N/A					
Natural Ventilation	121(b)	M0.1					
Minimum Ventilation	121(c)	M0.1					
VAV Minimum Position Control	121(c)	M0.1					
Demand Control Ventilation	121(c)	N/A					
Time Control	121(c), 122(e)	M0.1					
Setback and Setup Control	122(e)	N/A					
Outdoor Damper Control	122(f)	N/A					
Isolation Zones	122(g)	N/A					
Pipe Insulation	123	M0.1					
Duct Insulation	124	N/A					
PRESCRIPTIVE MEASURES							
Calculated Heating Capacity[2]	144(a & b)	8.3 MBH					
Proposed Heating Capacity[2]	144(a & b)	M0.1					
Calculated Cooling Capacity[2]	144(a & b)	106 MBH					
Proposed Cooling Capacity[2]	144(a & b)	M0.1					
Fan Control	144(c)	N/A					
DP Sensor Location	144(c)	N/A					
Supply Pressure Reset (DDC only)	144(c)	N/A					
Simultaneous Heat/Cool	144(d)	M0.1					
Economizer	144(e)	N/A					
Heat and Cool Air Supply Reset	144(f)	N/A					
Duct Sealing	144(k)	N/A					

1: For each central and single zone air systems (or group of similar units) fill in the reference to sheet number and/or specification section and paragraph number where the required features are documented. If a requirement is not applicable, put "N/A" in the column.

2: Not required for hydronic heating or cooling. Either enter value here or put in reference to plans and specifications per footnote 1.

2005 Nonresidential Compliance Forms — April 2005

MECHANICAL VENTILATION AND REHEAT MECH-3-C

PROJECT NAME: CSM AQUATICS CENTER, EQUIPMENT BUILDING — DATE: 09/19/08

MECHANICAL VENTILATION (§121(b)2)									REHEAT LIMITATION (§144(d))				
AREA BASIS				OCCUPANCY BASIS					VAV Minimum				
A	B	C	D	E	F	G	H	I	J	K	L	M	N
Zone/ System	Condition Area (ft²)	CFM per ft²	Min CFM by Area BxC	Num of People	CFM per Person	Min CFM by Occupant ExF	REQ'D V.A. Max of D or G	Design Ventilation Air cfm	30% of Design Zone Supply cfm	BxO.4 cfm/ft²	Max of Columns H,J,K, or 300 cfm	Design minimum Air setpoint	Transfer Air
GV-1	800	0.15	120	1	15	15	120	3500	N/A	N/A	N/A	N/A	0
EF-1	75	0.15	15	0	15	0	15	130	N/A	N/A	N/A	N/A	0
EF-2	75	0.15	15	0	15	0	15	130	N/A	N/A	N/A	N/A	0
EF-3	75	0.15	15	0	15	0	15	130	N/A	N/A	N/A	N/A	0
-	-	-	-	-	15	-	-	-	-	-	-	-	-
-	-	-	-	-	15	-	-	-	-	-	-	-	-
-	-	-	-	-	15	-	-	-	-	-	-	-	-
-	-	-	-	-	15	-	-	-	-	-	-	-	-
-	-	-	-	-	15	-	-	-	-	-	-	-	-
-	-	-	-	-	15	-	-	-	-	-	-	-	-
-	-	-	-	-	15	-	-	-	-	-	-	-	-
-	-	-	-	-	15	-	-	-	-	-	-	-	-
			Totals	1			165	1340	Column I Total Design Ventilation Air				0

C	Minimum ventilation rate per Section §121, Table 121-A.
E	Based on fixed seat or the greater of the expected number of occupants and 50% fo the CBC occupant load for egress purposes for spaces without fixed seating.
H	Required Ventilation Air (REQ'D V.A.) is the larger of the ventilation rates calculated on an AREA BASIS or OCCUPANCY BASIS (Column D or G).
I	Must be greater than or equal to H, or use Transfer Air (column N) to make up the difference.
J	Design fan supply cfm (from CFM)x30%, or
K	Condition area (ft²)x0.4 cfm/ft²; or
L	Maximum of Columns H,J,K, or 300 cfm
M	This must be less than or equal to Column I, and greater than or equal to the sum of Columns H plus N.
N	Transfer Air must be provided where the Required Ventilation Air (Column H) is greater than the Design Minimum Air (Column M). Where required, transfer air must be greater than or equal to the difference between the Required Ventilation Air (Column H) and the Design Minimum Air (Column M), Column H minus M.

2005 Nonresidential Compliance Forms

GENERAL NOTES

1. ALL CUTTING, PATCHING AND PAINTING BY GENERAL CONTRACTOR.
2. ALL ROOF, FLOOR AND WALL OPENINGS BY GENERAL CONTRACTOR.
3. CONDENSATE DRAIN LINES SHALL BE SLOPED AT 1/4" PER FOOT TO AN APPROVED RECEPTOR, ALL BY PLUMBING CONTRACTOR.
4. ROOF MOUNTED EQUIPMENT SHALL BE LABELED.
5. ALL APPLIANCES DESIGNED TO BE INSTALLED IN A PERMANENT POSITION SHALL BE SECURELY FASTENED IN PLACE.
6. LINING MATERIALS WITHIN DUCT SHALL HAVE A MOLD, HUMIDITY, AND EROSION RESISTANT SURFACE THAT MEETS THE REQUIREMENTS OF CMC CHAPTER 16, PART II AND CMC SECTION 605.0.
7. ALL FACTORY MADE AIR DUCT SHALL BE CLASS 1.
8. INSULATION MATERIALS APPLIED TO THE EXTERIOR OF THE DUCTS LOCATED IN THE BUILDING SHALL HAVE A FLAME SPREAD OF NOT MORE THAN 25 AND A GENERATED SMOKE-DENSITY NOT EXCEEDING 50 WHEN TESTED AS A COMPOSITE INSTALLATION.
9. ALL DUCTS SHALL BE SUPPORTED PER THE MINIMUM REQUIREMENT OF UMC TABLE 6-E, SHALL BE BRACED AND GUYED TO PREVENT LATERAL OR HORIZONTAL SWING, AND SHALL BE INSTALLED IN ACCORDANCE WITH SMACNA GUIDELINES.
10. ALL NEW THERMOSTATS TO BE WHITE AND MOUNTED 42" ABOVE FINISHED FLOOR.
11. ALL DUCT SIZE DIMENSIONS CALLED OUT ARE NET INSIDE DIMENSIONS OF DUCT, UNLESS OTHERWISE NOTED.

TABLE NO.1-G PIPE INSULATION THICKNESS

123(a) TABLE NO. 1-G

FLUID TEMPERATURE RANGE	CONDUCTIVITY RANGE (IN BTU INCH PER HOUR PER SQUARE FOOT PER °F	INSULATION MEAN RATING TEMPERATURE	NOMINAL PIPE DIAMETER (IN INCHES)					
			RUNOUTS UP TO 2	1 AND LESS	1.25 - 2	2.50 - 4	5 - 6	8 AND LARGER
HEATING SYSTEMS (STEAM, STEAM CONDENSATE AND HOT WATER)			INSULATION THICKNESS REQUIRED (IN INCHES)					
ABOVE 350	0.32 - 0.34	250	1.5	2.5	2.5	3.0	3.5	3.5
251-350	0.29 - 0.31	200	1.5	2.0	2.5	2.5	3.5	3.5
201-250	0.27 - 0.30	150	1.0	1.5	1.5	2.0	2.0	3.5
141-200	0.25 - 0.29	125	0.5	1.5	1.5	1.5	1.5	1.5
105-140	0.24 - 0.28	100	0.5	1.0	1.0	1.0	1.5	1.5

SERVICE WATER HEATING SYSTEMS (RECIRCULATING SECTIONS, ALL PIPING IN ELECTRIC TAPE SYSTEMS, AND THE FIRST 8 FEET OF PIPING FROM THE STORAGE TANK FOR NON-RECIRCULATING SYSTEMS)							
ABOVE 105	0.24 - 0.28	100	0.5	1.0	1.0	1.5	1.5	1.5
COOLING SYSTEMS (CHILLED WATER, REFRIGERANT, AND BRINE)								
40-60	0.23 - 0.27	.75	0.5	0.5	0.5	1.0	1.0	1.0
BELOW 40	0.23 - 0.27	.75	1.0	1.0	1.5	1.5	1.5	1.5

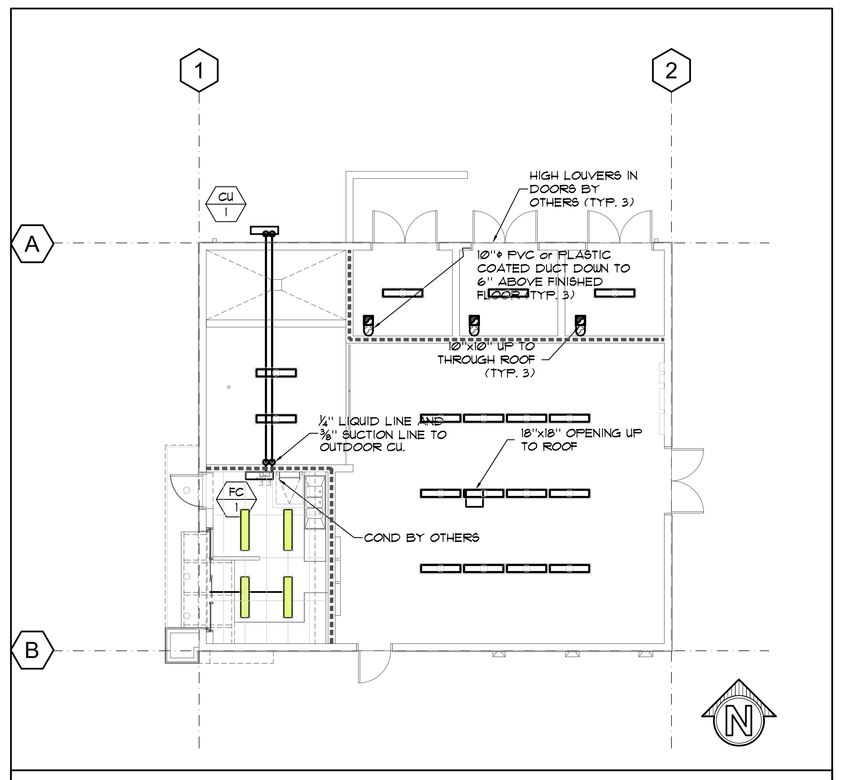

1 / M0.1 FIRST FLOOR MECHANICAL PLAN
SCALE: 1/8"=1'-0"

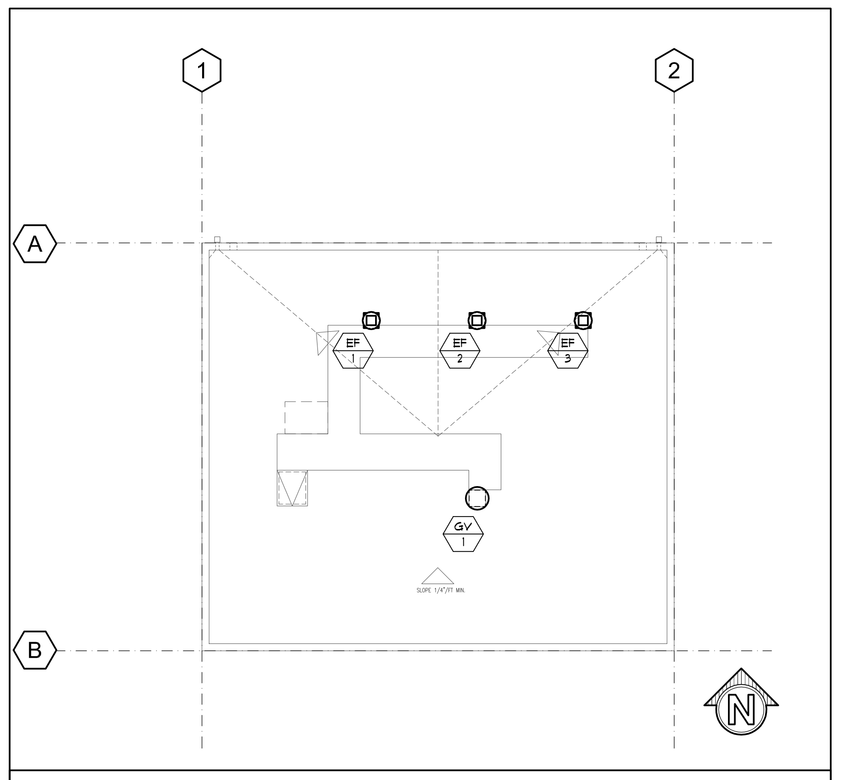

2 / M0.1 ROOF MECHANICAL PLAN
SCALE: 1/8"=1'-0"

McCarthy Building Companies, Inc
343 Sansome Street, 14th Floor
San Francisco, California 94104
P 415 364-1339
F 415 397-5999

IDENTIFICATION STAMP
DIV. OF THE STATE ARCHITECT
OFFICE OF REGULATION SERVICE
APPL. #: 01-110097
AC_____ FLS_____ SS_____
DATE _____
FILE NUMBER:

WESTERN ALLIED MECHANICAL INC
MECHANICAL CONTRACTORS
1580 O'BRIEN DRIVE
MENLO PARK, CA 94025
(650) 326-0750
(650) 327-4546 FAX
STATE CONTRACTOR LICENSE NO. 826782

This design is the exclusive property of Western Allied Mechanical, Inc. The drawings and blueprints containing this design are and shall remain the property of Western Allied Mechanical, Inc. The delivery of the original prints or copies thereof does not constitute a publication thereof.

These drawings or blueprints are exhibited to you solely for the purpose of transacting a sale by Western Allied Mechanical, Inc. of the mechanical system incorporated in the design. Any communication of this design without the written consent of Western Allied Mechanical, Inc. constitutes a violation of the laws of this State.

College of San Mateo
Site Package
San Mateo, CA

Developed for
San Mateo County Community College District

Revision	Description	Date

Revision	Description	Date
	DSA Submittal	05-15-08
	DSA Final	04-09-09
	RECORD SET	04-30-09

Job. No.	118051
Date	19 SEPTEMBER 2008
Drawn by	JGM
Checked by	LV
Scale	AS SHOWN

DRAWING SCHEDULE, TITLE 24, LEGENDS, NOTES & PLANS

M0.1