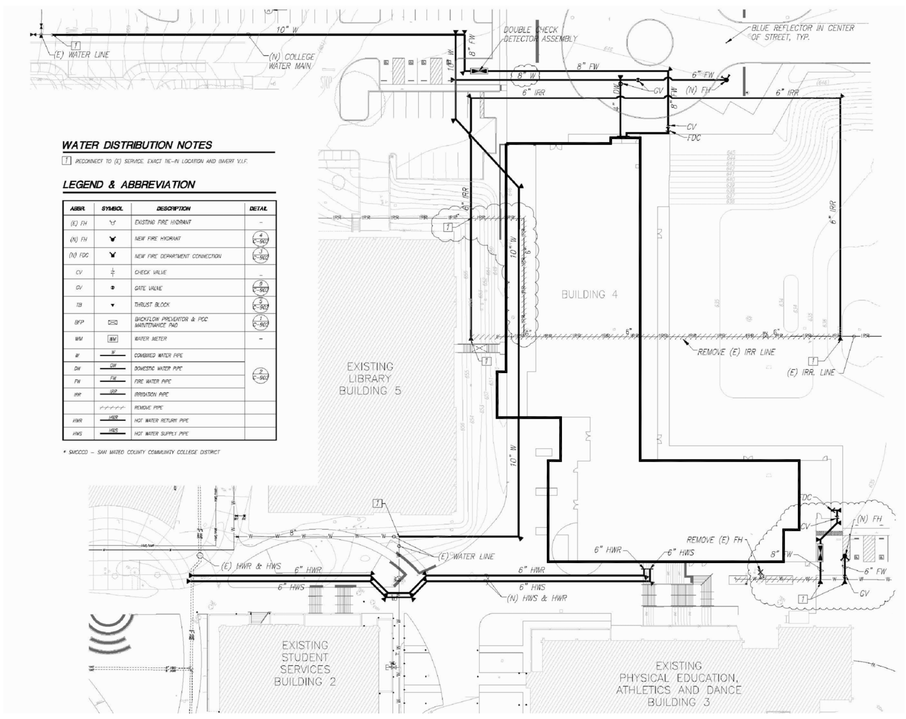

OVERALL SITE PLAN

FOR REFERENCE ONLY
SCALE: 1" = 60' ±
RE: C-731

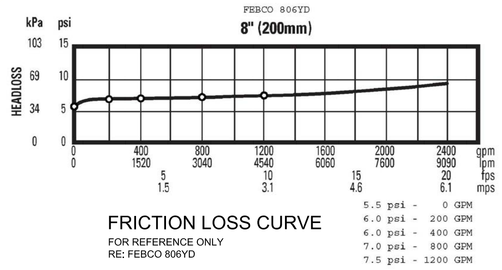

FRICTION LOSS CURVE

FOR REFERENCE ONLY
RE: FEBCO 806YD

4-WAY RISER BRACE

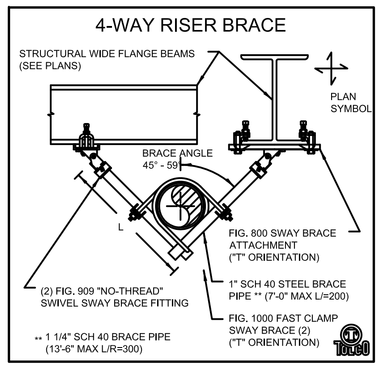

LATERAL EARTHQUAKE BRACE

20' MAXIMUM BETWEEN LATERAL BRACES (5' MAXIMUM FROM PIPE END)

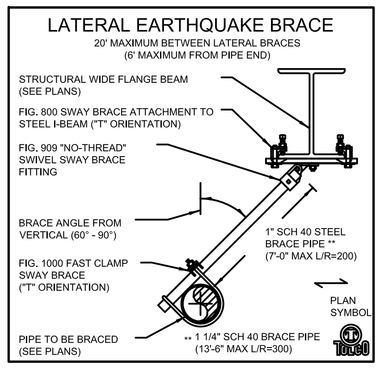

BOTTOM BEAM CLAMP

INTERMEDIATE BRANCH LINE RESTRAINT NOT REQUIRED WHERE HANGER LENGTH 6" OR LESS

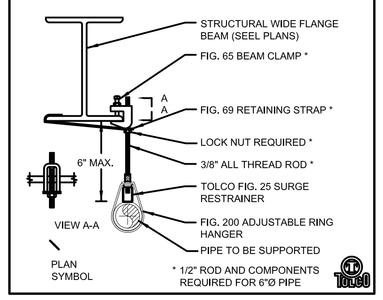

GENERAL NOTES

1. IT IS THE RESPONSIBILITY OF THE OWNER TO MAINTAIN THE INTEGRITY OF THE FIRE SPRINKLER SYSTEM
2. THE INSTALLATION OF THIS FIRE SPRINKLER SYSTEM SHALL BE IN CONFORMANCE WITH THE REQUIREMENTS OF NFPA 13 AND ASCE 7-05 AS APPLICABLE.
3. THE UNDERGROUND PORTION OF THIS FIRE SPRINKLER SYSTEM SHALL BE IN CONFORMANCE WITH THE REQUIREMENTS OF NFPA 24 (TRANSBAY STARTS AT FIRE SERVICE ENTRANCE INSIDE BLDG, 0'-6 AFF.)
5. ALL PAINTING AND/OR LABELING OF PIPE SHALL BE BY OTHERS
6. ALL FIRE EXTINGUISHERS AND CABINETS SHALL BE SUPPLIED BY OTHERS
7. THE FIRE SPRINKLER SYSTEM SHALL BE HYDRAULICALLY DESIGNED AS DETERMINED BY OCCUPANCY RATING
8. ALL PENETRATIONS OF RATED WALLS, PARTITIONS, OR OCCUPANCY SEPARATIONS SHALL BE FIRE STOPPED WITH AN APPROVED MATERIAL
9. ALL PIPE 2" AND LARGER USED FOR WELDED MAIN AND BRANCH LINES SHALL BE SCHEDULE 10 GROOVED AND SHALL CONFORM TO ASTM A-135
10. ALL PIPE 1" THROUGH 1½" USED FOR THREADED BRANCH LINES SHALL BE SCHEDULE 40 AND SHALL CONFORM TO ASTM A-135
11. ALL THREADED FITTINGS SHALL BE STANDARD DUCTILE IRON CONFORMING TO ASTM A-536, OR MALLEABLE IRON CONFORMING TO ANSI B16.3.
12. ALL GROOVED FITTINGS SHALL BE DUCTILE IRON CONFORMING TO ASTM A-536
13. ALL HANGING, BRACING, AND RESTRAINT OF BRANCHLINES SHALL BE IN CONFORMANCE WITH THE REQUIREMENTS OF NFPA 13 (2007) CHAPTER 9. BRACE FORCES PER ASCE 7-05.
14. NFPA 13 (2007) – ALL MATERIALS AND DEVICES SHALL BE LISTED FOR USE IN FIRE SPRINKLER SYSTEMS
15. NFPA 13 (2007) – UNDERGROUND MAINS AND LEAD-IN CONNECTIONS SHALL BE COMPLETELY FLUSHED BEFORE CONNECTION IS MADE TO THE FIRE SPRINKLER SYSTEM. FLUSHING SHALL BE WITNESSED BY THE INSPECTOR
16. NFPA 13 (2007) – ALL WELDING SHALL COMPLY WITH APPLICABLE REQUIREMENTS OF AWS B2.1
17. NFPA 13 (2007) – ALL HANDLES AND WHEELS OF CONTROL VALVES SHALL BE MONITORED AND/OR LOCKED IN THE OPEN POSITION
18. NFPA 13 (2007) – AN OUTSIDE ALARM BELL SHALL BE CONNECTED TO EACH RISER AND SHALL INCLUDE AN APPROVED IDENTIFICATION SIGN
19. NFPA 13 (2007) – A STOCK OF SPARE SPRINKLER HEADS OF EACH STYLE, TYPE, AND TEMPERATURE RATING ALONG WITH A SPRINKLER HEAD WRENCH SHALL BE PROVIDED
20. NFPA 13 (2007) – THE FIRE SPRINKLER SYSTEM SHALL BE HYDROSTATICALLY TESTED AT 200 PSI AND SHALL MAINTAIN THAT PRESSURE FOR 2 HOURS WITHOUT LOSS. THIS TEST SHALL BE WITNESSED BY THE INSPECTOR
21. NFPA 13 (2007) – A HYDRAULIC DESIGN DATA NAMEPLATE SHALL BE ATTACHED TO THE SYSTEM RISER
22. NFPA 13 (2007) – THE INSTALLING CONTRACTOR SHALL COMPLETE AND SIGN THE APPROPRIATE CONTRACTOR'S MATERIAL AND TEST CERTIFICATE
23. NFPA 13 (2007) – THE MAIN DRAIN VALVE SHALL BE OPENED FULLY AND LEFT OPEN UNTIL THE SYSTEM PRESSURE STABILIZES. THE STATIC AND RESIDUAL PRESSURES SHALL BE RECORDED ON THE CONTRACTOR'S TEST CERTIFICATE
24. LABEL ALL HOSE CONNECTIONS "FOR FIRE DEPARTMENT USE ONLY".

LONGITUDINAL EARTHQUAKE BRACE

80' MAXIMUM BETWEEN LONGITUDINAL BRACES (40' MAXIMUM FROM PIPE END)

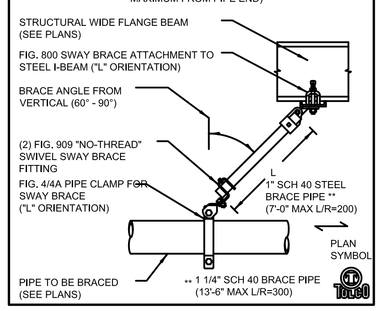

HANGER ROD STIFFENER

LOCATE WITHIN 4" OF SEISMIC BRACE (TYP.)

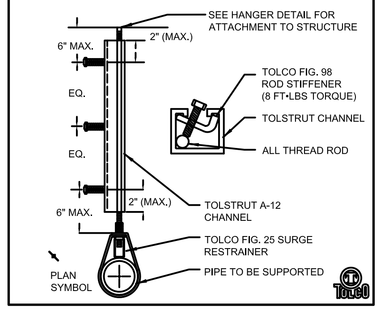

EXPANSION ANCHOR (ALTERNATE)

(USED WHERE NO STEEL TO HANG FROM)

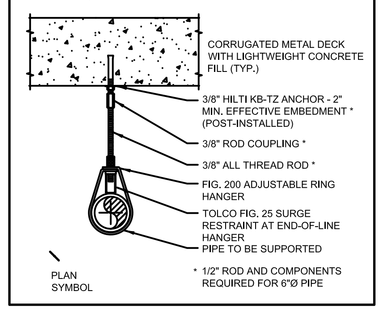

BRANCHLINE RESTRAINT

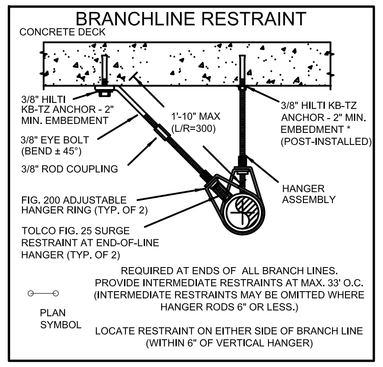

REQUIRED AT ENDS OF ALL BRANCH LINES. PROVIDE INTERMEDIATE RESTRAINTS AT MAX. 33' O.C. (INTERMEDIATE RESTRAINTS MAY BE OMITTED WHERE HANGER RODS 6" OR LESS.)

LOCATE RESTRAINT ON EITHER SIDE OF BRANCH LINE (WITHIN 6" OF VERTICAL HANGER)

FASTENER ATTACHMENT TO CONCRETE DECK / FLOOR

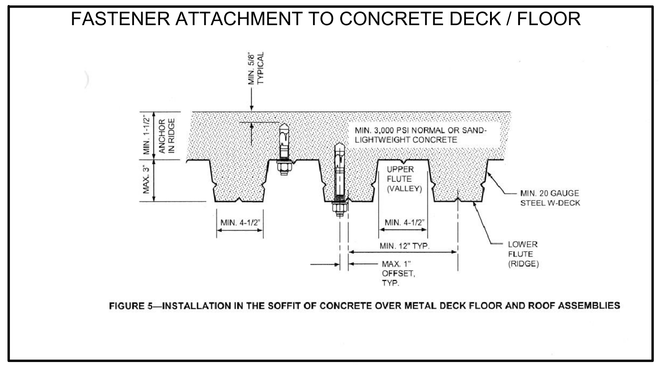

FIGURE 5—INSTALLATION IN THE SOFFIT OF CONCRETE OVER METAL DECK FLOOR AND ROOF ASSEMBLIES

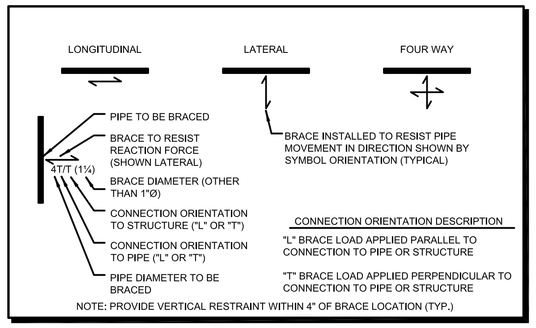

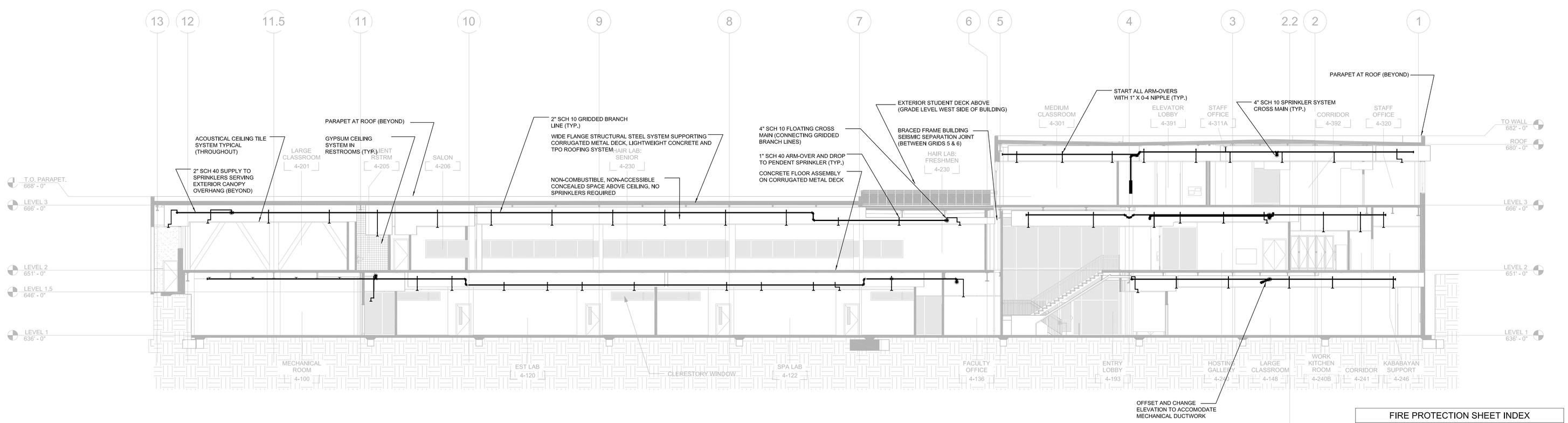

LONGITUDINAL BUILDING SECTION

SCALE: 1/8" = 1'-0"
RE: FP-101, FP-102, FP-103

0' 4' 8' 12' 16' 20' 24'

FIRE PROTECTION SHEET INDEX

SHEET	DESCRIPTION
FP-100	FIRE PROTECTION GENERAL NOTES, SECTION & DETAILS
FP-101	LEVEL 1 OVERALL FIRE PROTECTION FLOOR PLAN
FP-102	LEVEL 2 OVERALL FIRE PROTECTION FLOOR PLAN
FP-103	LEVEL 3 OVERALL FIRE PROTECTION FLOOR PLAN
FP-201	LEVEL 1 FIRE PROTECTION REFLECTED CEILING PLAN
FP-202	LEVEL 2 FIRE PROTECTION REFLECTED CEILING PLAN
FP-203	LEVEL 3 FIRE PROTECTION REFLECTED CEILING PLAN
FP-101A	LEVEL 1 - ENLARGED FIRE PROTECTION PLAN - SECTOR A
FP-101B	LEVEL 1 - ENLARGED FIRE PROTECTION PLAN - SECTOR B
FP-102A	LEVEL 2 - ENLARGED FIRE PROTECTION PLAN - SECTOR A
FP-102B	LEVEL 2 - ENLARGED FIRE PROTECTION PLAN - SECTOR B
FP-103A	LEVEL 3 - ENLARGED FIRE PROTECTION PLAN - SECTOR A

Sprinkler Head Information

Symbol	Brand	Model	SIN #	Description	Size	Temperature	K	Finish	Escutcheon	Quantity
■	Tyco	TY-EC	TY5237	EC Semi-Recessed Pendant	17/32	155°	11.2	Chrome	Chrome	
■ 200°	Tyco	TY-EC	TY5237	EC Semi-Recessed Pendant	17/32	200°	11.2	Chrome	Chrome	
●	Tyco	TY-FRB	TY3231	Semi-Recessed Pendant	1/2	155°	5.6	Chrome	Chrome	
● 200°	Tyco	TY-FRB	TY3231	Semi-Recessed Pendant	1/2	200°	5.6	Chrome	Chrome	
◀ 200°	Tyco	TY-FRB	TY3331	Standard Sidewall	1/2	200°	5.6	Brass	n/a	
⊙	Tyco	TY-FRB	TY3131	Standard Upright	1/2	155°	5.6	Brass	n/a	
									Total All Sheets	

Sprinkler Head Symbols

- Standard Upright
- Semi-recessed Pendant
- EC Semi-recessed Pendant
- Semi-Recessed Dry Pendant
- Standard Horizontal Sidewall

Standard Symbols

- Riser Location
- Hanger
- Hanger with rod stiffener
- Two Way Brace
- Four Way Brace
- Hydraulic Node
- End of Line Restraint

North

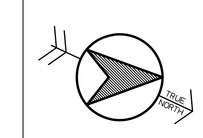

WRNS STUDIO LLP
501 SECOND STREET
4TH FLOOR, STE. 402
SAN FRANCISCO
CALIFORNIA 94107
415.489.2224 TEL
415.358.9100 FAX
WWW.WRNSSTUDIO.COM

Steinberg Architects

Hensel Phelps Construction Co.

TRANSBAY FIRE PROTECTION, INC.
License No. 629778
2182 Rheem Dr. Pleasanton, CA 94588
(925) 846-0484 Fax (925) 846-0710

NO.	ISSUES/REVISIONS	DATE
1	100% SCHEMATIC DESIGN SUBMITTAL	04/28/08
2	50% DESIGN DEVELOPMENT SUBMITTAL	06/13/08
3	100% DESIGN DEVELOPMENT SUBMITTAL	07/28/08
4	DSA INCREMENT #1: SITE DEMOLITION, EXCAVATION, ROUGH GRADING & UTILITIES	09/25/08
5	DSA INCREMENT #2: 80% REVIEW	10/10/08
6	DSA INCREMENT #2: STRUCTURE & GFRC PANELS	11/11/08
7	DSA INCREMENT #3: 50% REVIEW	11/11/08
8	DSA INCREMENT #1: BACK CHECK	11/19/08
9	DSA INCREMENT #3: 90% REVIEW	12/19/08
10	DSA INCREMENT #3: TENANT IMPROVEMENT AND ROOFING SYSTEM	02/09/09
14	DSA INCREMENT #3: BACKCHECK	05/12/09
	AS-BUILT DRAWINGS	02/07/11

DIVISION OF THE STATE ARCHITECT
APPL # 01-110117
FILE # 41-C1
AC _____ FLS _____
SSS _____ DATE _____
IDENTIFICATION STAMP

Increment 3

SKYLINE COLLEGE

SAN MATEO COUNTY COMMUNITY COLLEGE DISTRICT

CIP2 DESIGN-BUILD PROJECT BUILDING 4 INCREMENT 3

PROJECT NO.: 07055.00 DRAWN BY: CN
DATE: 05/12/2009 CHECKED BY: CM
SCALE: 1/8" = 1'-0"

SHEET TITLE:

FIRE PROTECTION GENERAL NOTES, SECTION & DETAILS

SHEET NO:

FP-100

All drawings and written material appearing herein constitute original and unpublished work of the Architect/Engineer and may not be duplicated, used or disclosed without consent of Architect/Engineer.

If this drawing is not 30"x42", then the drawing has been revised from its original size. Noted scales must be adjusted. This line should be equal to one inch