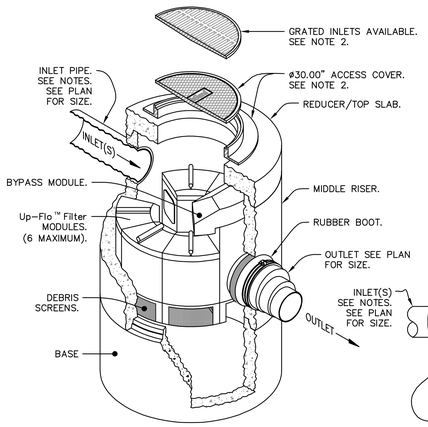

PROJECT DATA			
VAULT DATA			
RIM ELEVATION	606.33'		
PIPE INLET(S)/OUTLET	INVERT ELEVATION	PIPE ID	PIPE TYPE
INLET	592.84'	12"	PVC
OUTLET	591.34'	12"	PVC
FILTER MODULE DATA			
Peak Flow Rate (cfs)			2.53
Quantity of Cartridges			5
Cartridge Flow Rate (gpm)			125
Media Type (CPZ, Perlite, Sand)			CPZ

MODEL NUMBER	TREATMENT FLOW RATE for CPZ MEDIA	
	GPM	CFS
CF-48UF-5	125	0.279
BYPASS FLOW RATE:	5-7 CFS	

Up-Flo™ Filter is manufactured under license agreement with Hydro International.

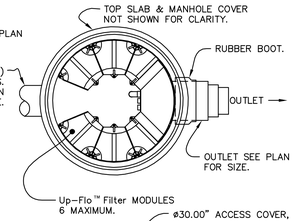

NOTES:

1. PRECAST CONCRETE STRUCTURE SHALL BE MANUFACTURED IN ACCORDANCE WITH ASTM DESIGNATION C478.
2. CAST IRON ACCESS COVER ASSEMBLIES SHALL BE BOLTED WITH GASKET. CUSTOM SIZE COVERS & INLET GRATES AVAILABLE PER CUSTOMER REQUIREMENT.
3. FOR STRUCTURE DIMENSIONS OTHER THAN THOSE SHOWN, REFER TO CUSTOM STRUCTURE DRAWING. DETAIL REFLECTS DESIGN INTENT ONLY. REFER TO PROJECT SPECIFIC DRAWINGS FOR ACTUAL DIMENSIONS.
4. STRUCTURE MAY BE SPECIFIED WITH EXTENDED BASE SLAB TO ALLOW FOR ANTI-FLOATATION BALLAST. CONTACT KRISTAR ENTERPRISES FOR ADDITIONAL INFORMATION.
5. INLET & OUTLET ELEVATIONS, MAY DIFFER BY 0-3 FEET. FOR INVERT ELEVATION DIFFERENCES THAT EXCEED 3 FEET CONTACT KRISTAR ENTERPRISES. MULTIPLE INLETS CAN BE ACCOMODATED.
6. CUSTOM SYSTEMS ARE AVAILABLE FOR PIPE ORIENTATIONS OR SIZES NOT SHOWN. CONTACT KRISTAR ENTERPRISES FOR ENGINEERING ASSISTANCE.
7. MULTI-SIZE OUTLET IS DESIGNED TO ACCEPT PVC SDR-35 (ø10", ø12", & ø15").

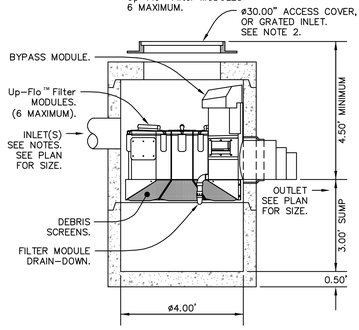

SECTION VIEW

1 KRISTAR UP-FLO FILTER 48" MANHOLE 6 MODULE MAXIMUM

NTS

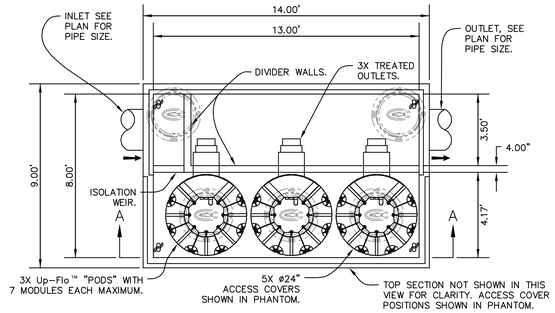

PROJECT DATA			
VAULT DATA			
CL RIM ELEVATION	538.0±'		
PIPE INLET(S)/OUTLET	INVERT ELEVATION	PIPE ID	PIPE TYPE
INLET	532.78'	18"	PVC
OUTLET	530.73'	18"	PVC
FILTER MODULE DATA			
Peak Flow Rate (cfs)			10.61
Quantity of Cartridges			19
Cartridge Flow Rate (gpm)			475
Media Type (CPZ, Perlite, Sand)			CPZ

Up-Flo™ Filter is owned by Hydro International and licensed to KriStar Enterprises, Inc.

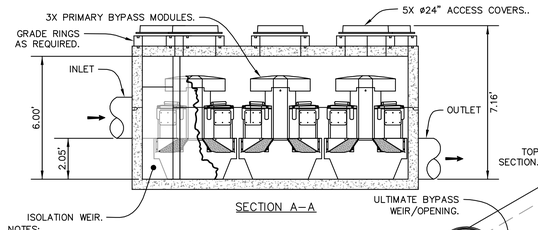

SECTION A-A

NOTES:

1. PRECAST CONCRETE STRUCTURE SHALL BE MANUFACTURED IN ACCORDANCE WITH ASTM DESIGNATION C857 AND C858.
2. STRUCTURE AND ACCESS COVERS MUST MEET AASHTO H20-44 LOAD RATING.
3. CAST IRON ACCESS COVER ASSEMBLIES SHALL BE BOLTED WITH GASKET.
4. FOR STRUCTURE DIMENSIONS OTHER THAN THOSE SHOWN, REFER TO CUSTOM STRUCTURE DRAWING. DETAIL REFLECTS DESIGN INTENT ONLY. REFER TO PROJECT SPECIFIC DRAWINGS FOR ACTUAL DIMENSIONS.
5. STRUCTURE MAY BE SPECIFIED WITH ANTI-FLOATATION EXTENDED BASE SLAB TO ALLOW FOR ANTI-FLOATATION BALLAST TO BE SPECIFIED BY ENGINEER. CONTACT KRISTAR ENTERPRISES FOR ADDITIONAL INFORMATION.
6. INLET OUTLET ELEVATIONS, MAY DIFFER BY 0-3 FEET. FOR INVERT ELEVATION DIFFERENCES THAT EXCEED 3 FEET CONTACT KRISTAR ENTERPRISES.
7. SYSTEM MAY BE EQUIPPED WITH OPTIONAL DRAIN-DOWN APPARATUS TO ELIMINATE STANDING WATER IN SEDIMENTATION CHAMBER.
8. CUSTOM SYSTEMS ARE AVAILABLE FOR PIPE ORIENTATIONS OR SIZES NOT SHOWN. CONTACT KRISTAR ENTERPRISES FOR ENGINEERING ASSISTANCE.

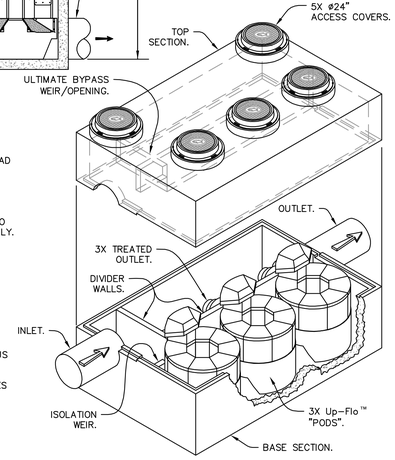

MODEL NUMBER	TREATMENT FLOW RATE for CPZ MEDIA	
	GPM	CFS
CF-813UF-19	475	1.06

Up-Flo™ Filter is owned by Hydro International and licensed to KriStar Enterprises, Inc.

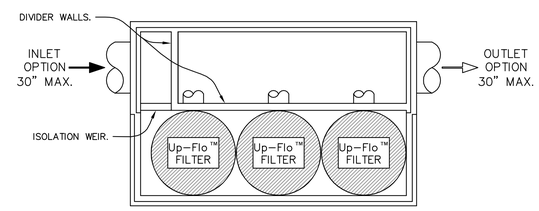

2 KRISTAR UP-FLO FILTER 8' X 13' VAULT 21 MODULE MAXIMUM

NTS

RECORD DRAWINGS

THESE RECORD DOCUMENTS HAVE BEEN PREPARED BASED ON INFORMATION PROVIDED BY OTHERS. BKF ENGINEERS HAS NOT VERIFIED THE ACCURACY AND/OR COMPLETENESS OF THIS INFORMATION AND SHALL NOT BE RESPONSIBLE FOR ANY ERRORS OR OMISSIONS THAT MAY BE INCORPORATED HEREIN AS A RESULT. BKF ENGINEERS DOES NOT ASSUME ANY RESPONSIBILITY FOR THE FIELD MODIFICATIONS TO THE PLANS.

BY: BKF ENGINEERS DATE: JUNE 2011

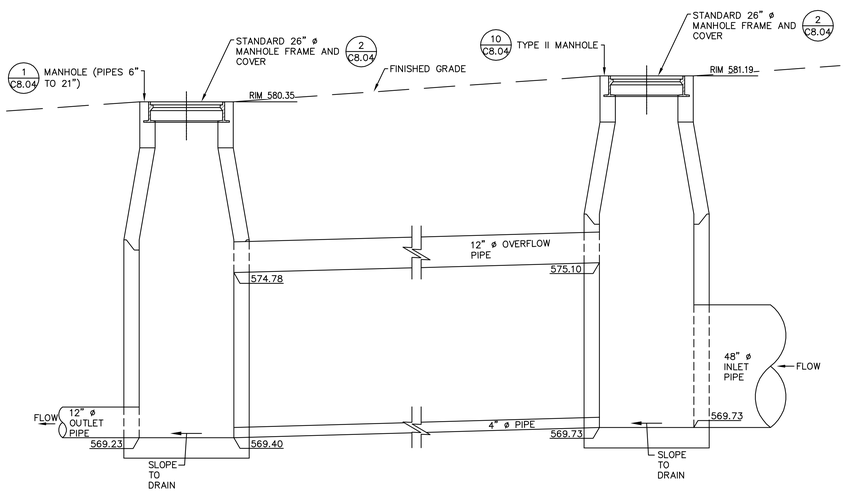

PROFILE VIEW

3 DIVERSION STRUCTURE (DISCHARGE TO SYSTEM E)

SCALE: 1"=2'

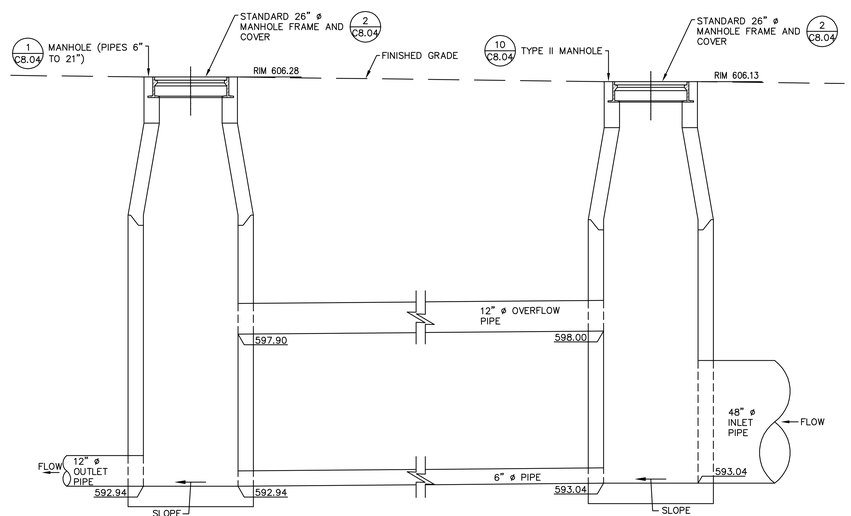

PROFILE VIEW

4 DIVERSION STRUCTURE (DISCHARGE TO SYSTEM B)

SCALE: 1"=2'

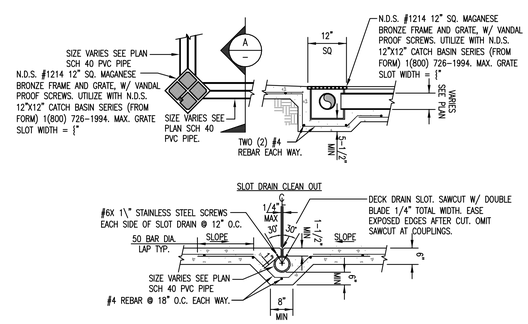

NOTE:

1. CONCRETE FLATWORK AND/OR PAVERS WITHIN 15 FEET FROM SWIMMING POOL EDGES SHOULD BE AT LEAST 4 INCHES THICK AND SUPPORTED ON AT LEAST 4 INCHES OF CLASS 2 AGGREGATE BASE OVERLYING SUBGRADE MATERIAL SCARIFIED TO A DEPTH OF 6", MOISTURE CONDITIONED, AND COMPACTED TO 90% MINIMUM RELATIVE COMPACTION.

5 POOL DECK SLOT DRAIN

NTS

McCARTHY LPA KH

McCarthy Building Companies, Inc.
343 Sansome Street, 14th Floor
San Francisco, California 94104
P 415 | 364-1339
F 415 | 397-5999

BKF ENGINEERS | SURVEYORS | PLANNERS
255 SHORELINE DRIVE, SUITE 200
REDWOOD CITY, CA 94065
PHONE: (650) 482-6300
FAX: (650) 482-6399

REGISTERED PROFESSIONAL ENGINEER RICHARD N.Y. HAGA No. C043971 CIVIL STATE OF CALIFORNIA

IDENTIFICATION STAMP
DIV. OF THE STATE ARCHITECT
OFFICE OF REGULATION SERVICE
APPL #: 01-110097
AC_____ FLS _____ SS _____
DATE _____

FILE NUMBER:

This and all other project documents and all ideas, aesthetics and arrangements herein are the property of and instruments of service of McCarthy Building Companies, Inc. and Lee Polisky Architects (LPA, INC.) (LPA) and cannot be lawfully used in whole or in part for any project or purpose except as described in the contractual agreement between McCarthy and the District. LPA hereby gives formal notice that any such project document use, reproduction or modification (misuse) is not only unlawful but automatically binds all parties involved with misuse to fully indemnify and defend LPA and LPA's Consultants to the maximum extent allowed against all claims and damages or liabilities arising out of or related to the project document misuse. Project documents describe design intent of work and are not a representation of as-built or existing conditions. LPA and LPA's Consultants make no representations concerning the accuracy of documents and are not responsible for any discrepancies between project documents and the existing conditions.

© Copyright 2008

College of San Mateo
Site Package
San Mateo, CA

Developed for
San Mateo County Community College District

Revision	Description	Date

Revision	Description	Date
	DSA SUBMITTAL	19 SEPT 2008
	DSA FINAL	09 APRIL 2009
	PROJECT RECORD DRAWING	JUNE 2011

Job. No.	27082.30
Date	02 APRIL 2009
Drawn by	MD, JT
Checked by	RH
Scale	AS SHOWN

CONSTRUCTION DETAILS

C8.06