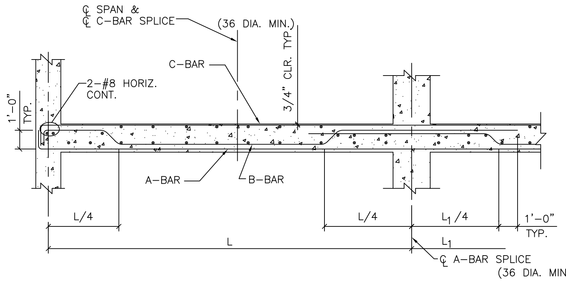

TYPICAL FLAT SLAB REINFORCEMENT

NO SCALE

NOTES:

WHERE THE SLAB IS INTERRUPTED BY AN OP'NG BEND THE REINF. 6" MIN. INTO BEAM FRAMING THE OP'NG.

WHERE A SLAB OCCURS BEYOND BEAM. OR WALL, EXTEND B & C BARS 5'–0" INTO SLAB BEYOND

REINF. IN THE N.–S. DIRECTION IS NEAREST THE FACE OF THE SLAB UNLESS OTHERWISE NOTED.

ALL REINF. IN FLAT SLABS IS #4 THE No. OF A,B & C BARS IN EQ. COLUMN & MIDDLE STRIP IS SHOWN IN THE PLANS OPPOSITE.

REINF. SHALL BE SPACED UNIFORMLY ACROSS THE MIDDLE STRIPS & COLUMN STRIPS

FINISH FLOOR–THE DESIGNATION "FIN. FLR." SHALL MEAN THE TOP OF FINISHED MASONRY, WHETHER MONOLITHIC CONCRETE, APPLIED CONCRETE FINISH AS ON INTERIOR STAIRS AND LANDINGS, TERRAZZO, ETC. IT SHALL HAVE THE SAME MEANING AS ARCHITECT'S "TOP OF SLAB."

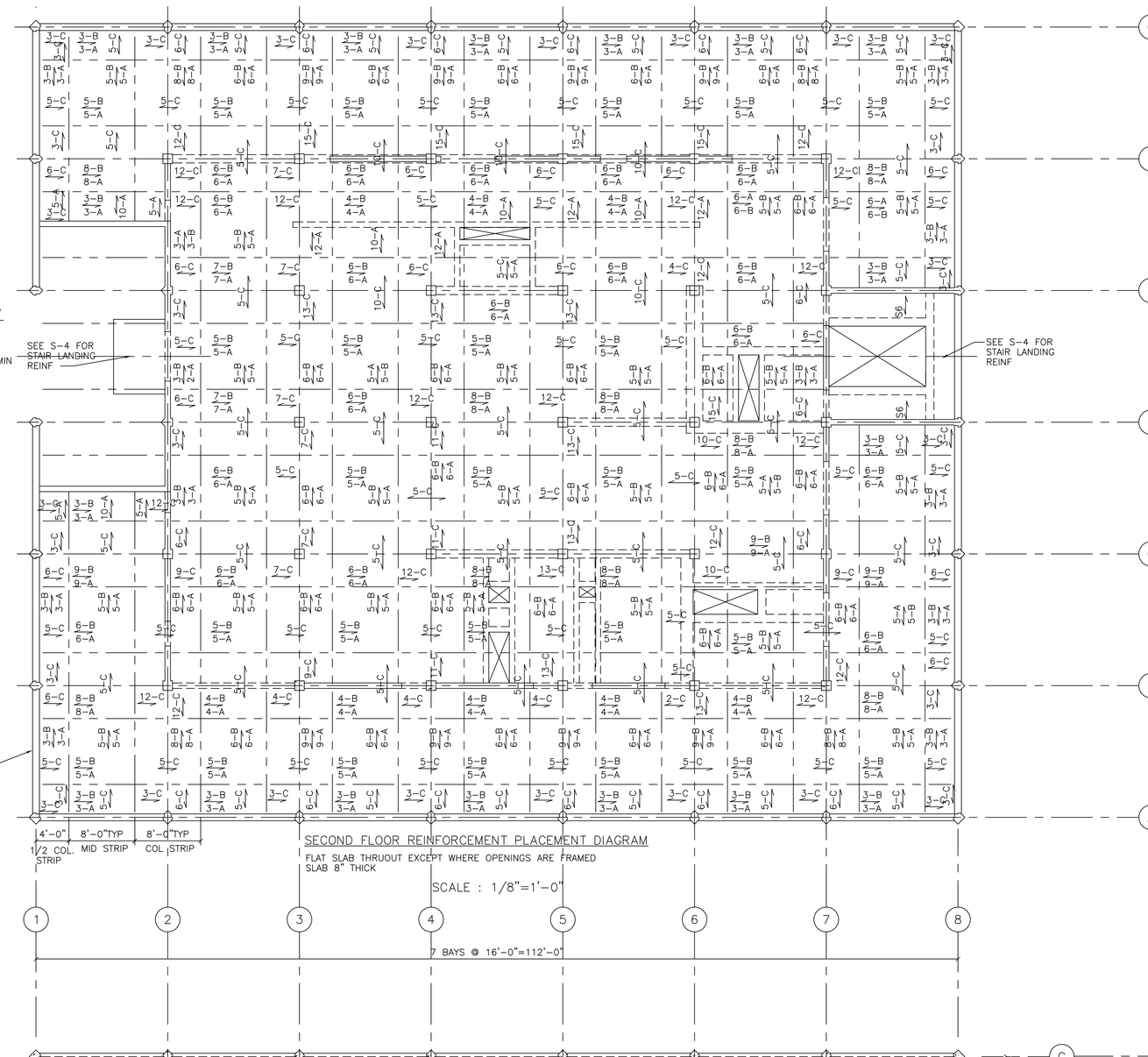

SECOND FLOOR REINFORCEMENT PLACEMENT DIAGRAM

FLAT SLAB THRUOUT EXCEPT WHERE OPENINGS ARE FRAMED
SLAB 8" THICK

SCALE : 1/8"=1'–0"

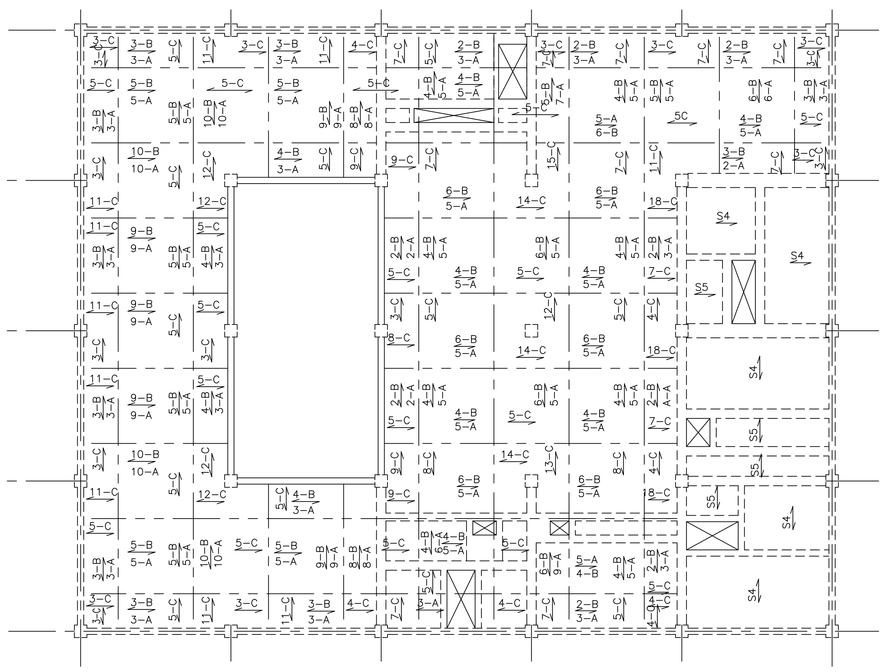

ROOF REINFORCEMENT PLACEMENT PLAN

FLAT SLAB THRUOUT EXCEPT WHERE OPENINGS ARE FRAMED.
SLAB 6" THICK

SCALE : 1/8"=1'–0"

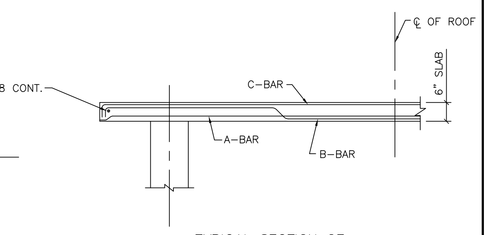

TYPICAL SECTION OF CLERESTORY ROOF

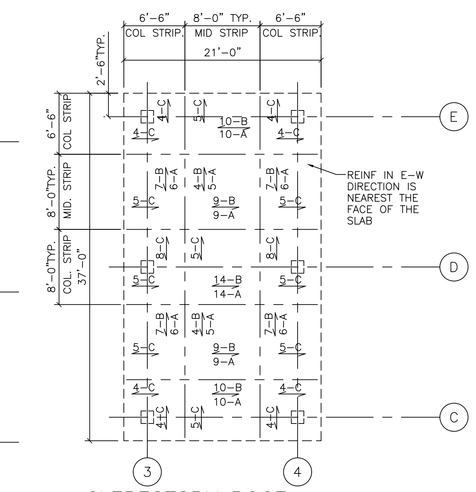

CLERESTORY ROOF REINFORCEMENT PLACEMENT PLAN

FLAT SLAB THRUOUT EXCEPT WHERE OPENINGS ARE FRAMED.
SLAB 6" THICK

SCALE : 1/8"=1'–0"

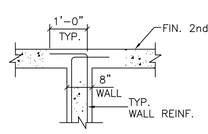

SECTION E–S2

SCALE : 1/2"=1'–0"

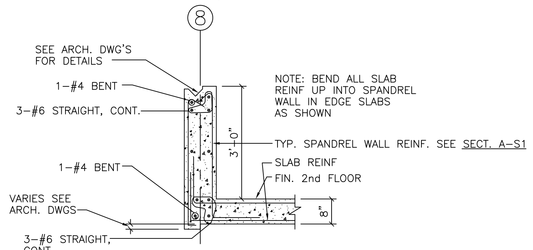

SECTION A–S2

SCALE : 1/2"=1'–0"

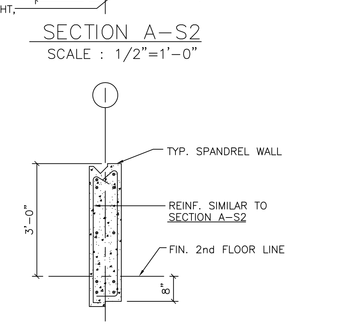

SECTION B–S2

SCALE : 1/2"=1'–0"

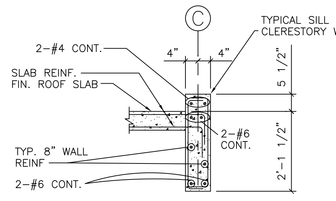

SECTION C–S2

SCALE : 1/2"=1'–0"

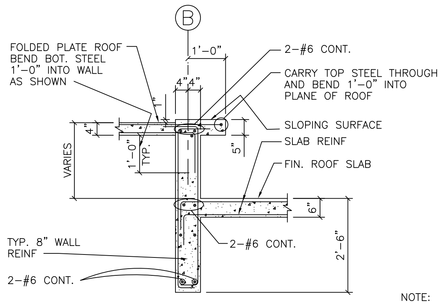

SECTION D–S2

SCALE : 1/2"=1'–0"

NOTE: SECTIONS SHOW ARE CUT ON TI

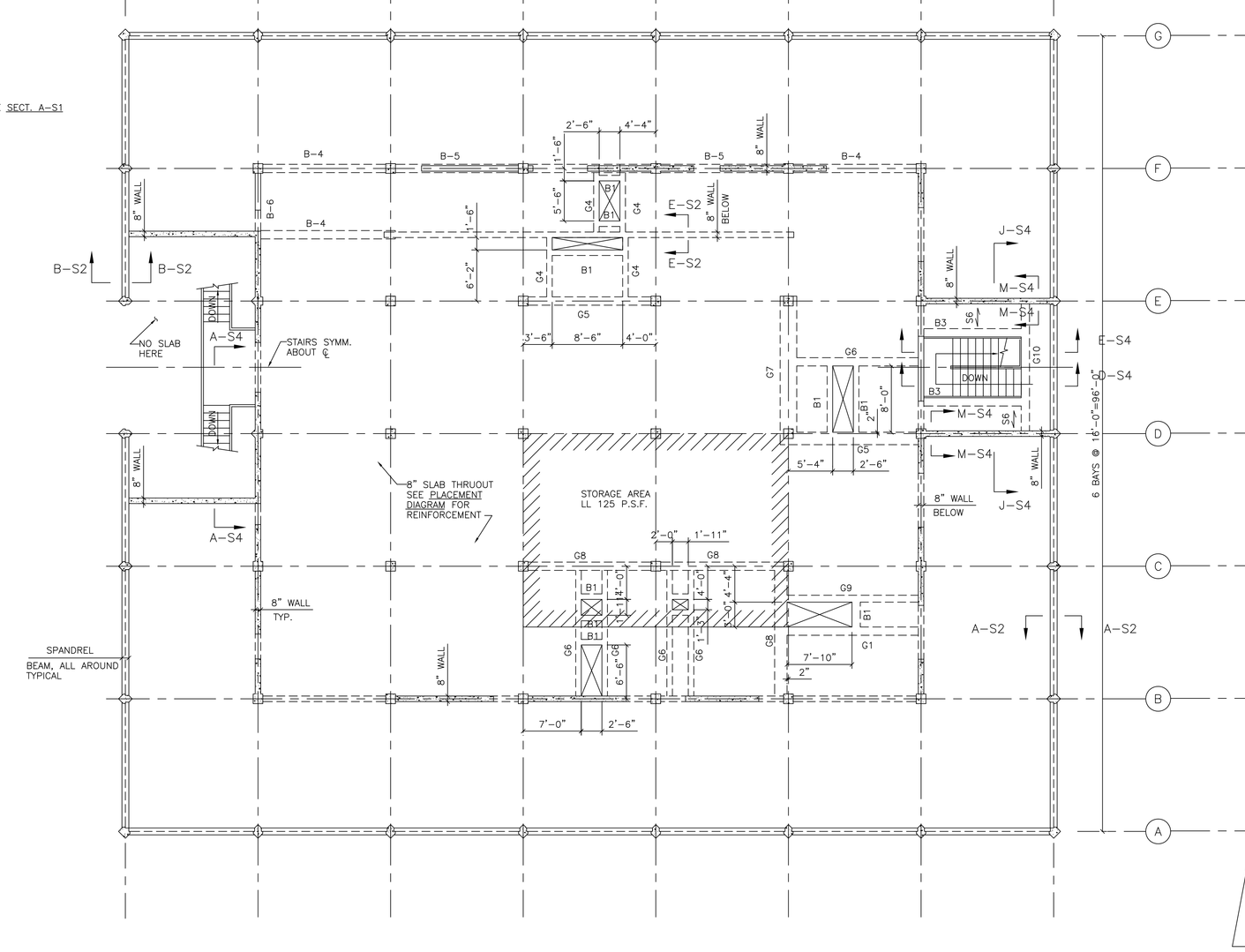

SECOND FLOOR FRAMING PLAN

SCALE : 1/8"=1'–0"

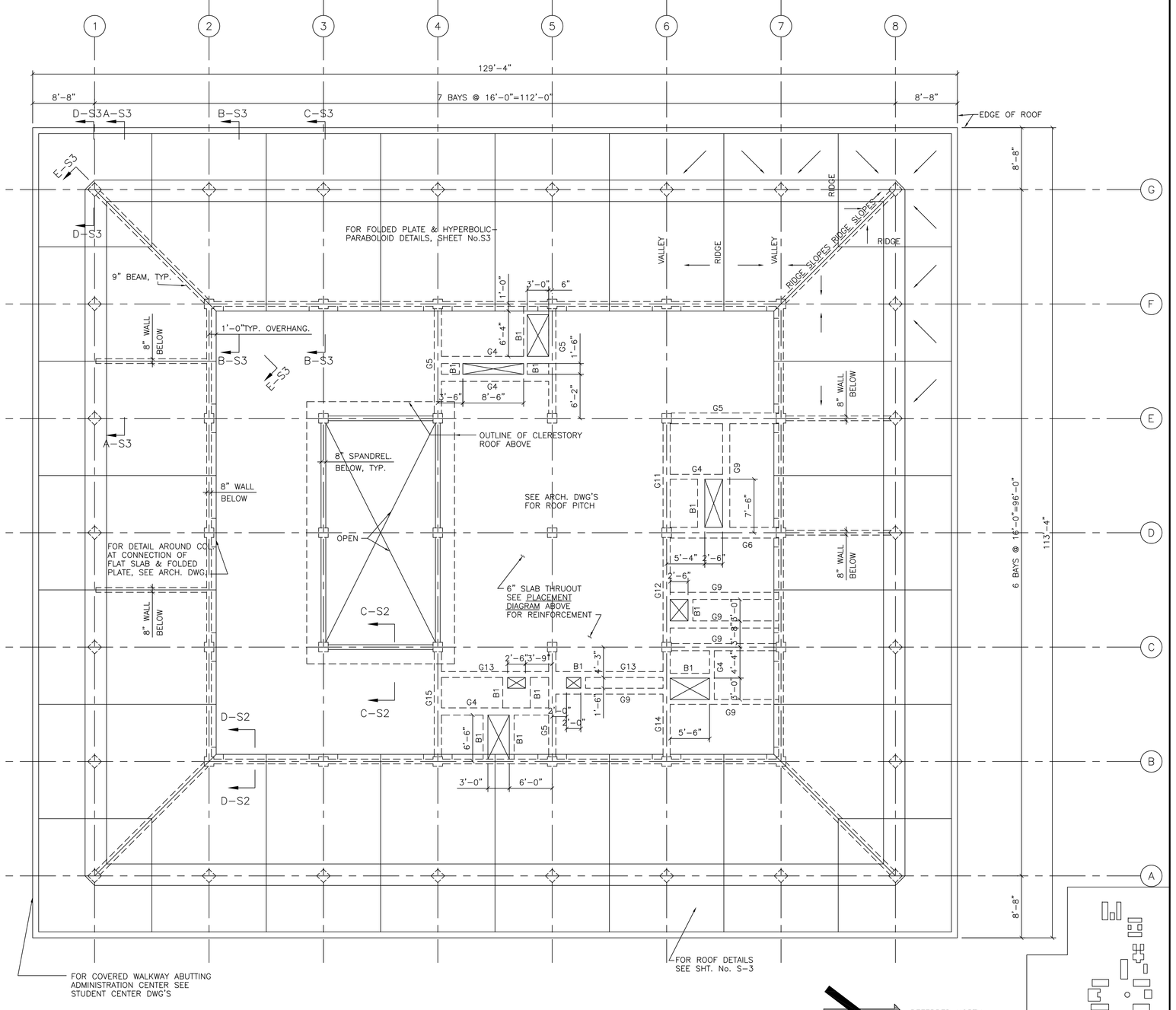

ROOF FRAMING PLAN

SCALE : 1/8"=1'–0"

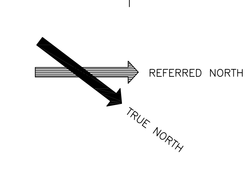

KEY PLAN

GEORGE W. HUTCHINSON DIRECTOR OF BUILDING CONSTRUCTION SAN MATEO JUNIOR COLLEGE DISTRICT	JULIO L. BORTOLAZZO SUPERINTENDENT	JOHN A. BLUME & ASSOC. ENGINEERS JOHN CARL WARNECKE, ARCHITECT	JOHN A. BLUME & ASSOC. ENGINEERS STRUCTURAL ENGINEERS KELLER & CANNON MECHANICAL & ELECTRICAL ENGINEERS ROYSTON, HANAMOTO AND MAYES LANDSCAPE ARCHITECTS	JOHN CARL WARNECKE A.I.A. ARCHITECT 111 NEW MONTGOMERY ST. • SAN FRANCISCO	**COLLEGE OF SAN MATEO** COLLEGE HEIGHTS CAMPUS SAN MATEO, CALIF.	JOB NO. 208490 DRAWN BY M.A.	DATE 1 DEC. 1960 CHECKED BY H.C.W.,R.A.G.	ADMINISTRATION BUILDING ROOF AND SECOND FLOOR FRAMING PLAN	BLDG. NO. 1	SHEET NO. S-2 OF 5