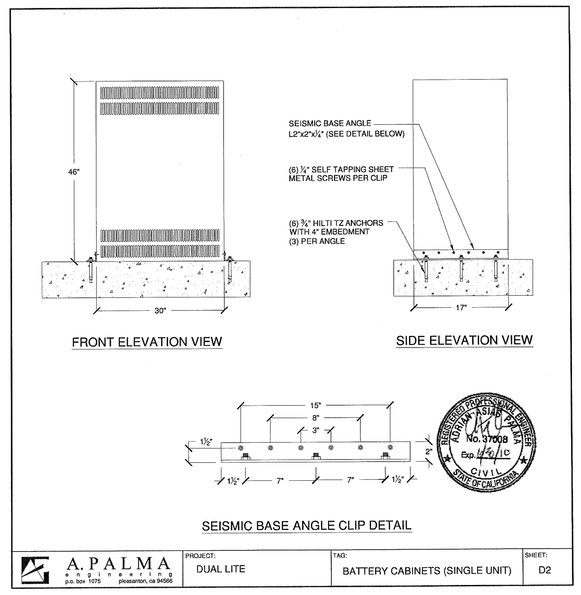

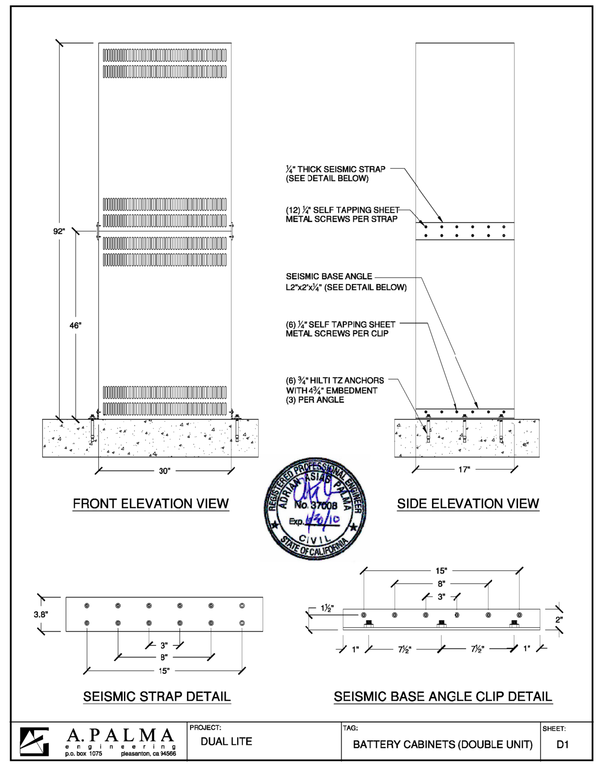

NOTE: LOCATED ON THIRD FLOOR SLAB (LWC OVER METAL DECK) WITH 5" HOUSEKEEPING PAD.

ANCHORAGE DETAIL FOR INVERTER

SCALE: NTS

9

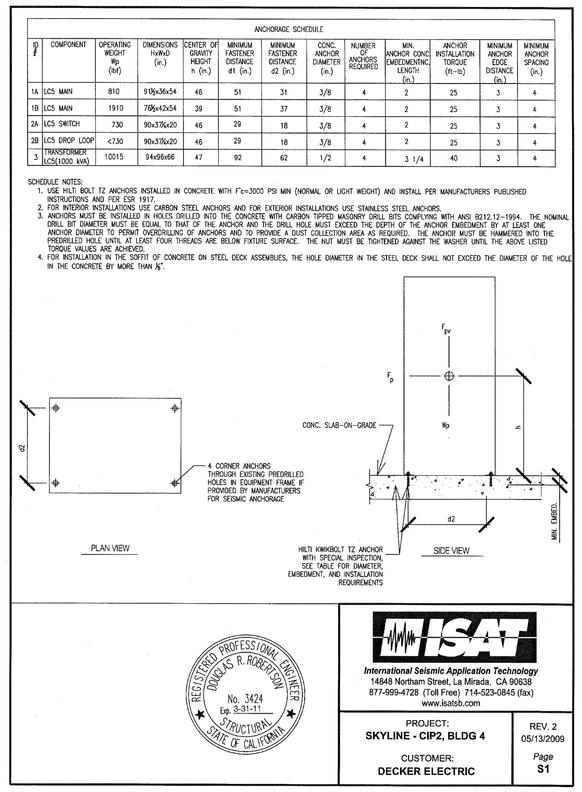

ANCHORAGE DETAIL FOR MAIN SERVICE SWITCHBOARD

SCALE: NTS

7

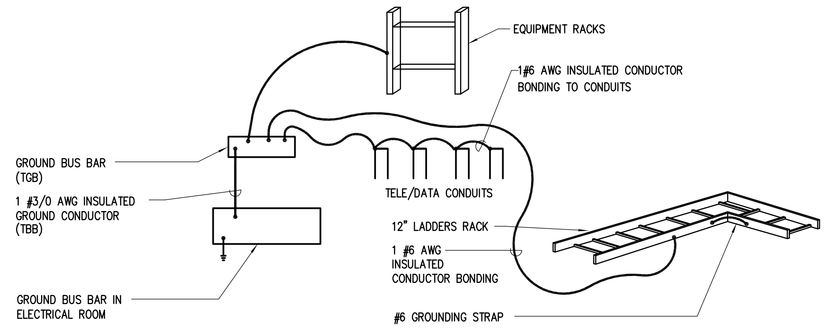

TYPICAL GROUNDING DIAGRAM - TDA/TDB/TDC ROOM

SCALE: NTS

4

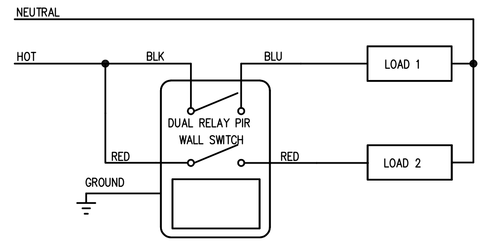

TYPICAL WALL MOUNTED OCCUPANCY SENSOR BI-LEVEL WIRING

SCALE: NTS

1

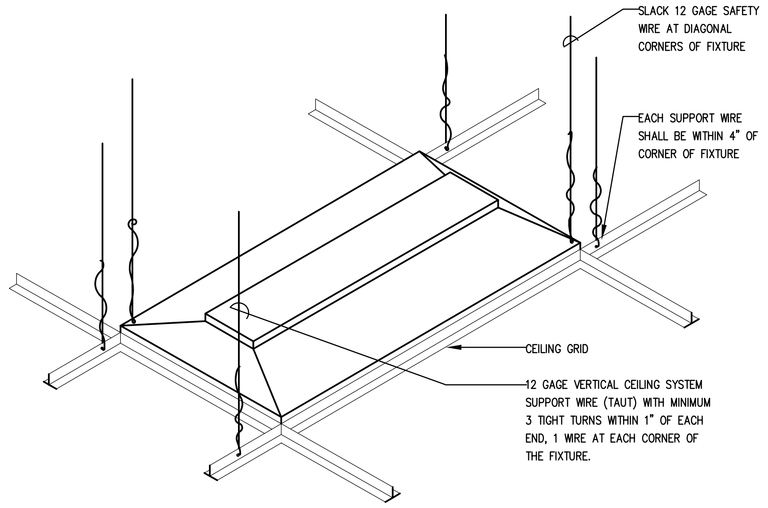

LAY-IN FIXTURE SUPPORT DETAIL

SCALE: NTS

5

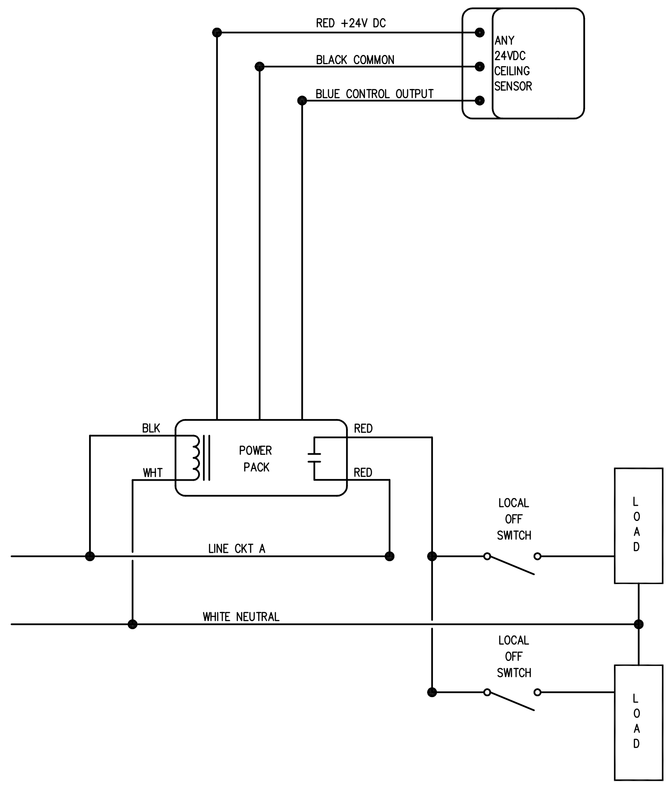

TYPICAL CEILING MOUNTED OCCUPNCY SENSOR WIRING

SCALE: NTS

2

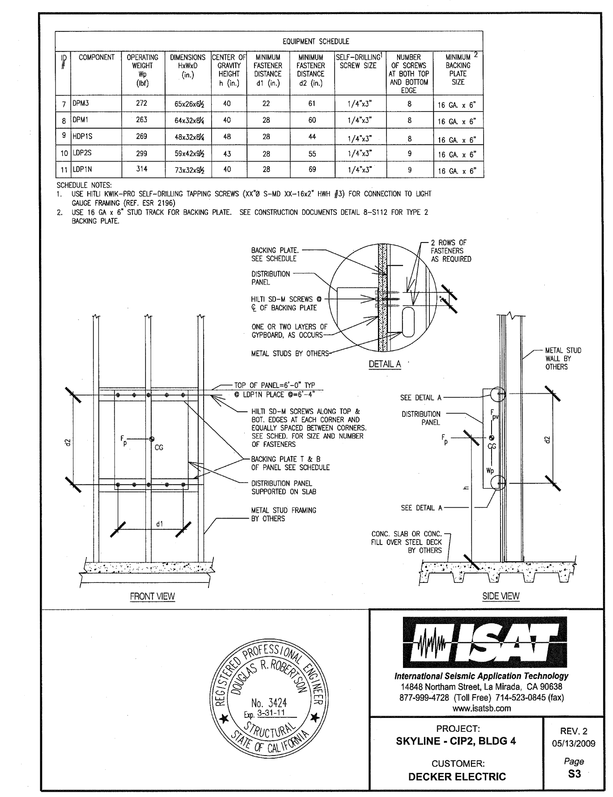

ANCHORAGE DETAIL FOR LDP2S, LDP1N, DPM1, HDP1S, DPM3

SCALE: NTS

10

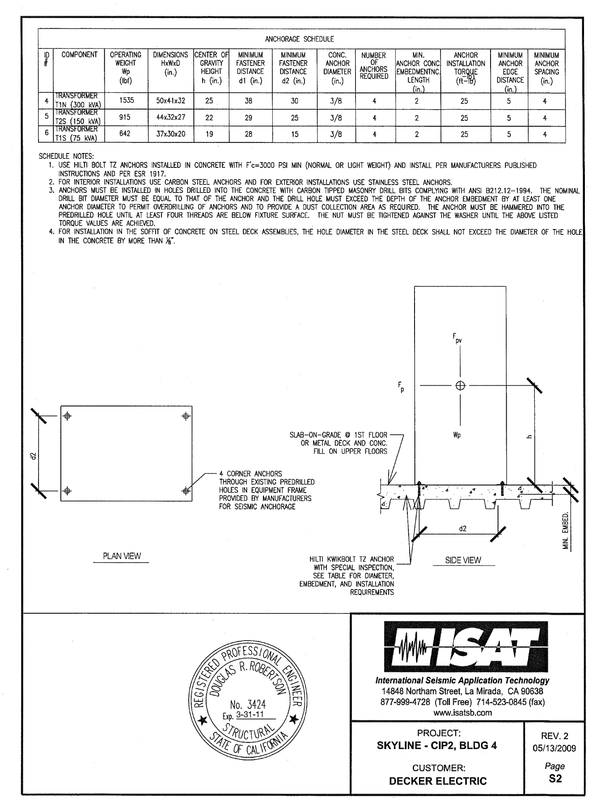

ANCHORAGE DETAIL FOR TRANSFORMERS T1N, T1S, T2S

SCALE: NTS

8

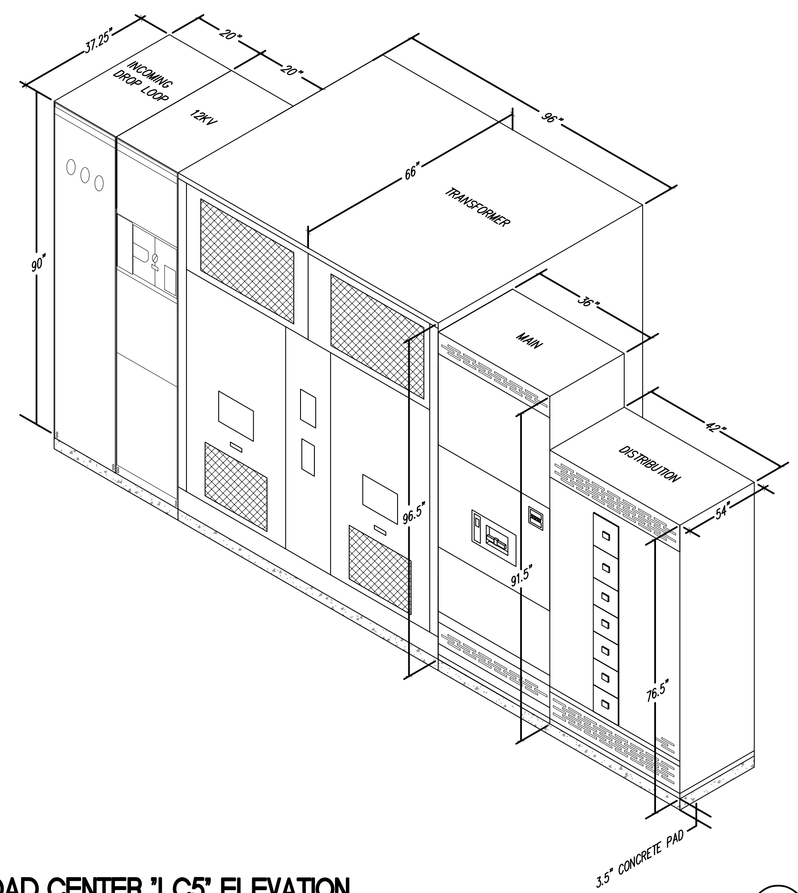

LOAD CENTER 'LC5' ELEVATION

SCALE: NTS

6

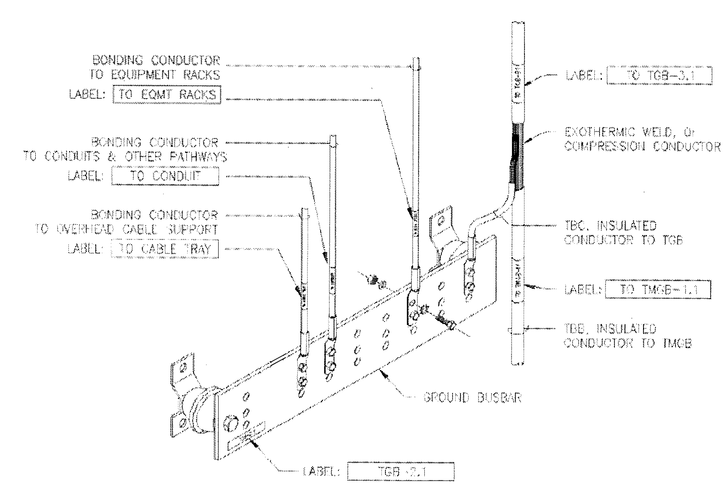

GROUNDING BUSBAR

SCALE: NTS

3

WRNS
501 SECOND STREET
4TH FLOOR, STE. 402
SAN FRANCISCO
CALIFORNIA 94107
415.489.2224 TEL
415.888.9100 FAX
WWW.WRNSSTUDIO.COM

Steinberg Architects

Hensel Phelps Construction Co.

DECKER ELECTRIC
147 Beacon Street
South San Francisco, CA 94080
Phone (650) 635-1390
Decker Electric Co., Inc.
Electrical Contractors
LIC. NO. 3779 C-10

RANDALL LAMB
Engineers – Mechanical, Electrical, Communication, Lighting Design
SAN DIEGO–SAN FRANCISCO
208 Utah Street, Suite 410 (415) 512-9771
San Francisco, California 94103 Fax (415) 512-8940

NO.	ISSUES/REVISIONS	DATE
	100% SCHEMATIC DESIGN	04/28/08
	50% DESIGN DEVELOPMENT SUBMITTAL	06/13/08
	100% DESIGN DEVELOPMENT SUBMITTAL	07/28/08
	DSA INCREMENT #2: 80% REVIEW	10/10/08
	DSA INCREMENT #2: STRUCTURE & GFRC PANELS	11/11/08
	DSA INCREMENT #3 50% REVIEW	11/11/08
	INTERNAL 90% REVIEW INCREMENT 3	12/23/08
	DSA INCREMENT #3: TENANT IMPROVEMENT AND ROOFING SYSTEM	02/09/09
	DSA INCREMENT #3: HPCC REVIEW	04/30/09
	DSA INCREMENT #3: BACKCHECK	05/12/09
	ISSUED TO FIELD	08/12/09
	RECORD DRAWINGS	12/27/10

DIVISION OF THE STATE ARCHITECT
APPL # 01-110117
FILE # 41-C1
AC _____ FLS _____
SSS _____ DATE _____
IDENTIFICATION STAMP
Increment 3

SKYLINE COLLEGE
SAN MATEO COUNTY COMMUNITY COLLEGE DISTRICT

CIP2 DESIGN-BUILD PROJECT
BUILDING 4
INCREMENT 3

REVPLANT

PROJECT NO.: SF10570.00 DRAWN BY: IB
DATE: 04/28/08 CHECKED BY: AJS
SCALE: NONE

SHEET TITLE:

ELECTRICAL DETAILS AND WIRING DIAGRAMS

SHEET NO:

E-500

All drawings and written material appearing herein constitute original and unpublished work of the Architect/Engineer and may not be duplicated, used or disclosed without consent of Architect/Engineer.

If this drawing is not 30"x42", then the drawing has been revised from its original size. Noted scales must be adjusted. This line should be equal to one inch