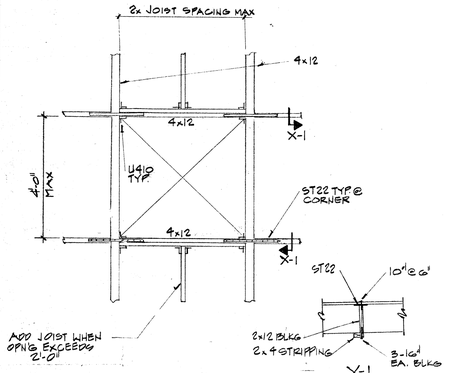

4A TYPICAL ROOF OPENING

X-1

1/2" = 1'-0"

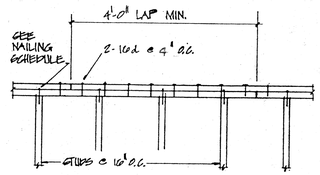

4B DBL. TOP PLATE SPLICE

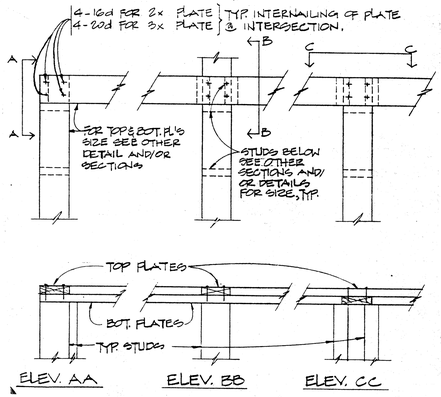

4C TYPICAL DETAIL AT INTERSECTION OF TOP & BOTTOM PLATES

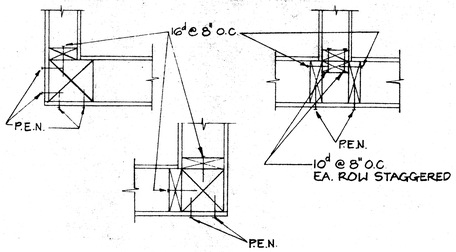

4D TYP. STUD WALL INTER. DETAIL

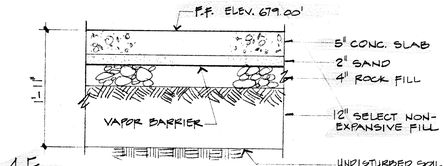

4E SECTION AT FLOOR SLAB ON GRADE

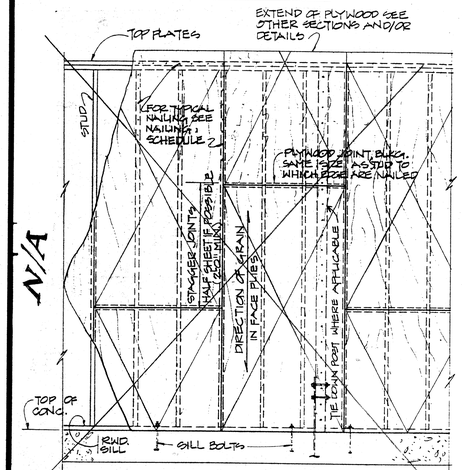

4F TYPICAL PLYWOOD WALL SHEATHING DETAIL

N/A

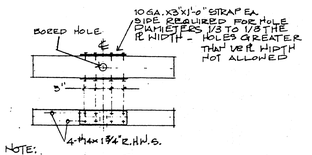

NOTE:
LOCATE ALL HOLES @ ℄ MEMBER.
TYP. HOLES IN WALL PLATES

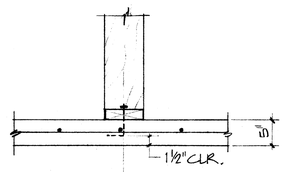

ON SLAB

NOTE: SEE 4N/S4 FOR ITEMS NOT NOTED

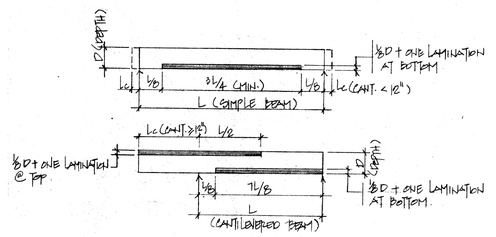

JOINTS FOR GLD SHALL BE IN ACCORDANCE WITH UBC STANDARD (1988) 25-10 SECTION 2510.1009.1. THE OPENG REQUIRING 6" SPACING SHALL BE WITHIN "SHADE ZONE" AS SHOWN.

OPENING WIDTH	'd'
UP TO 3'-6"	4"
3'-7" TO 6'-0"	6"
6'-1" TO 8'-0"	8"
8'-1" TO 10'-0"	10"

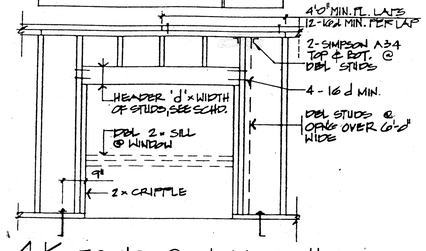

4K FRM'G. @ WALL OPN'G.

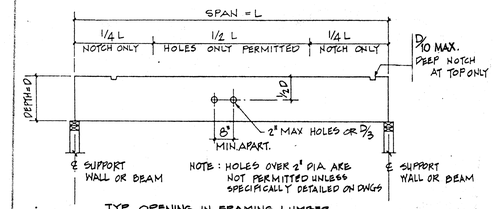

TYP. OPENING IN FRAMING LUMBER

4G SMALL PLUMBING OR LARGE ELECTRICAL HOLES

NOTE: ONLY ONE (1) STUD PER 4'-0" MIN. CAN BE PENETRATED BY PIPE DIAMETER > 1/3 OF STUD WIDTH.

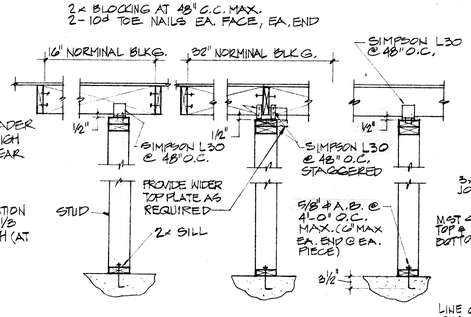

TYP. SILL BOLT DETAIL AT
4H NON-LOAD BEAR'G PART'N WALL

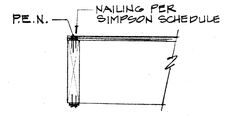

4J TYPICAL LAMINATION JOINT REQUIREMENT FOR GLD

NO SCALE.

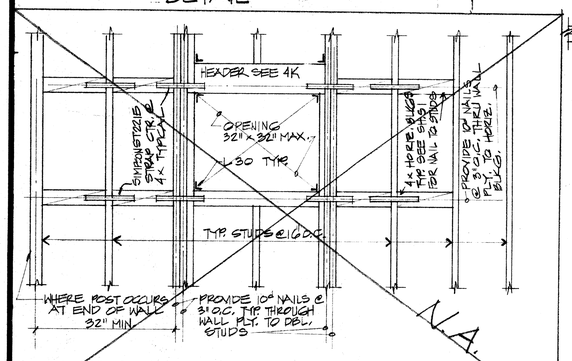

N.A.

TYP PLY. SHEAR WALL REINF DET.
4L FOR OPENING 32" SQ OR SMALLER

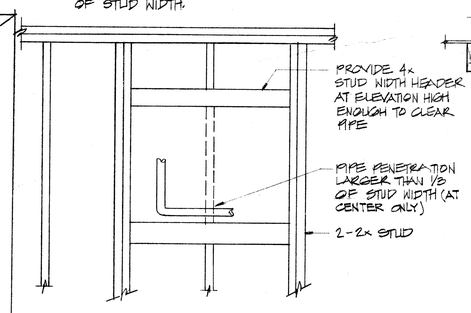

WALL STUD REINFORCING
4M DETAIL @ PIPE PENETRATION

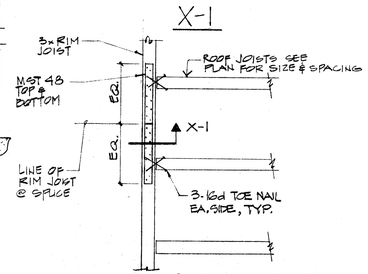

TYP. CONNECTION OF
4P RIM JOIST @ SPLICE

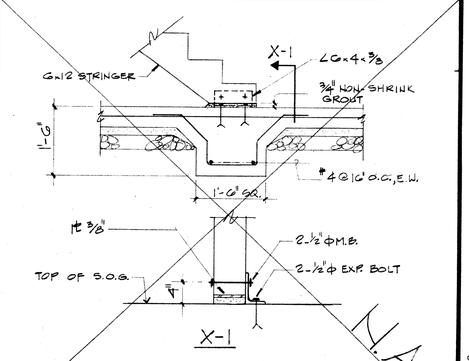

N.A.

4Q. TYP. STAIR CONN. @ BOT.

OSA - STRUCTURAL SAFETY

Department of General Services
Office of the State Architect
Approved
53-74 Jerks

SFM-STATE FIRE MARSHALL

OSA - ACCESS COMPLIANCE

RINNE & PETERSON
STRUCTURAL ENGINEERS
4280 EL CAMINO REAL PALO ALTO
CALIFORNIA 94306 (415) 857-1400

KELLER AND DASEKING • ARCHITECTS
WALTER L. KELLER A.I.A.
WILLIAM H. DASEKING A.I.A.
825 OAK GROVE AVENUE
MENLO PARK, CA 94025 415/322-5366
C. 13234

AUTOMOTIVE CLASSROOM BUILDING
TOILET ROOM RENOVATIONS
SKYLINE COLLEGE
SAN MATEO COUNTY COMMUNITY COLLEGE DISTRICT

8906

12-90

S-4

REV 8 22 90