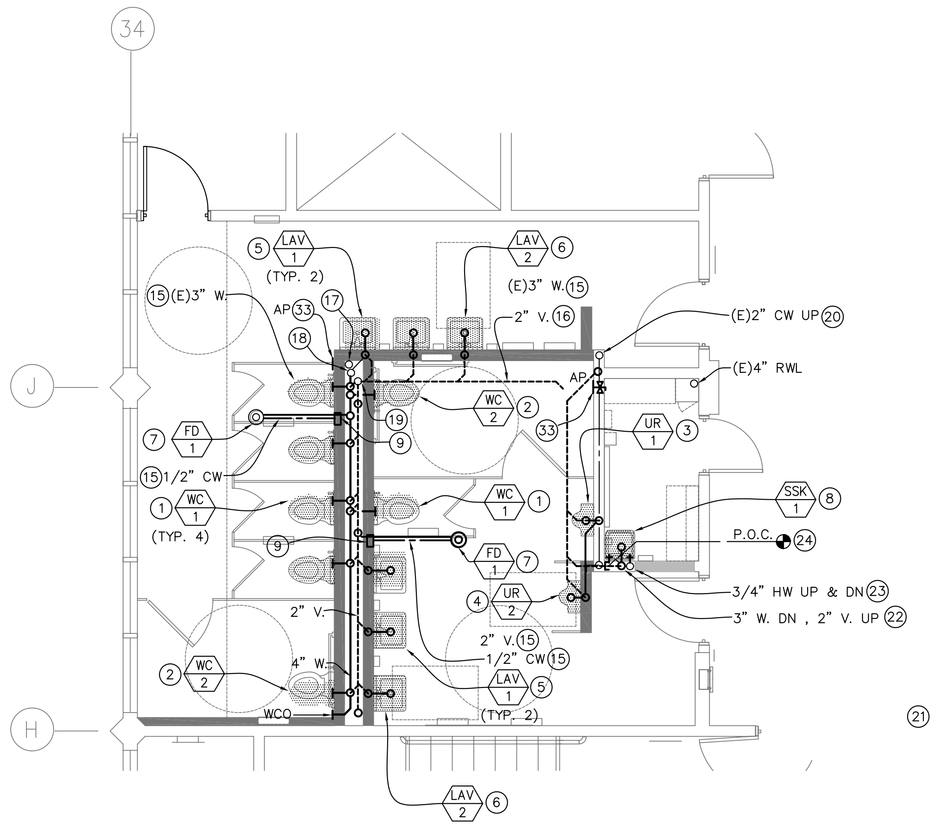

2 ENLARGED FIRST FLOOR TOILET ROOM - MODERNIZATION WORK
SCALE: 1/4"=1'-0"

REFERENCE NORTH

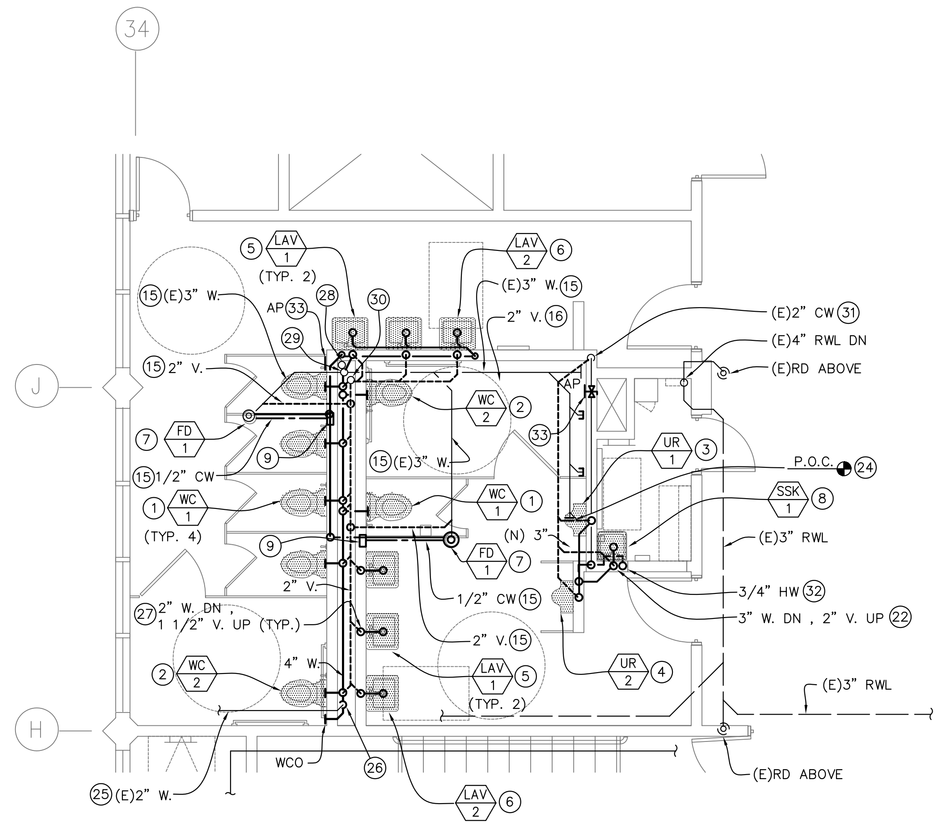

3 ENLARGED SECOND FLOOR TOILET ROOM - MODERNIZATION WORK
SCALE: 1/4"=1'-0"

REFERENCE NORTH

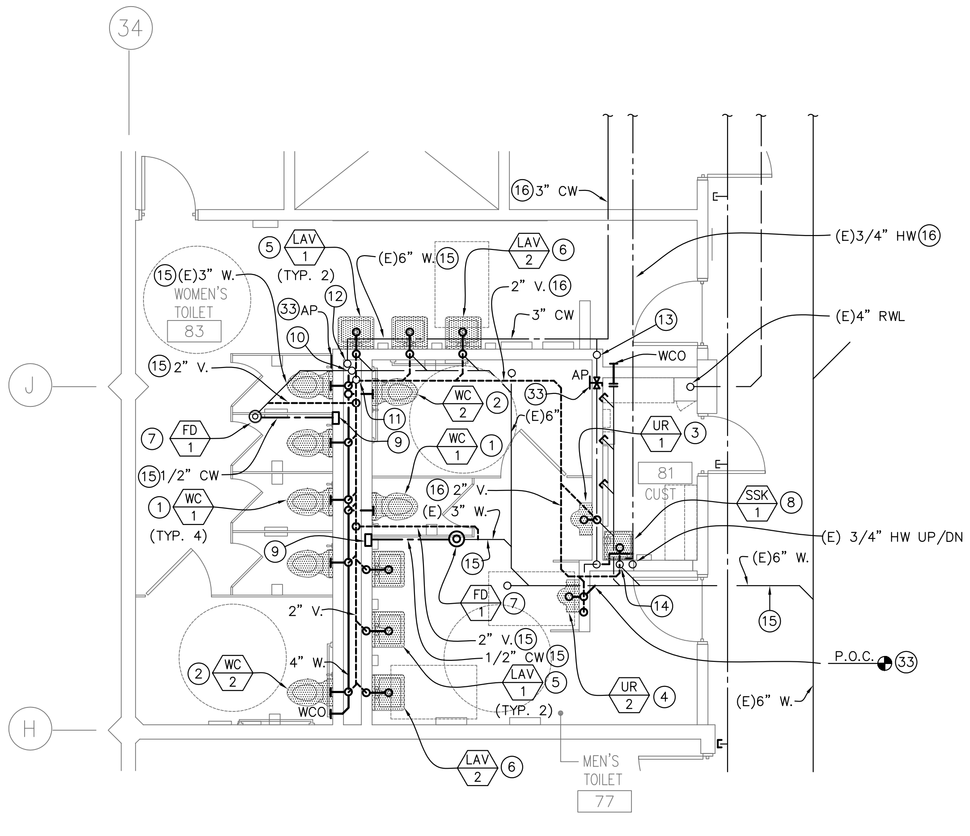

1 ENLARGED GROUOND FLOOR TOILET ROOM - MODERNIZATION WORK
SCALE: 1/4"=1'-0"

REFERENCE NORTH

Modernization Plan Key Notes

1. INSTALL WALL MOUNTED WATER CLOSET. CONNECT 4" WASTE, 2" VENT, AND 1" CW TO FLUSHOMETER VALVE.
2. INSTALL WALL MOUNTED ADA COMPLIANT WATER CLOSET. CONNECT 4" WASTE, 2" VENT AND 1" CW TO FLUSHOMETER VALVE. REFER TO ARCH. DWGS. FOR FIXTURE MOUNTING HEIGHT.
3. INSTALL WALL HUNG URINAL. CONNECT 2" WASTE, 1 1/2" VENT AND 3/4" CW TO FLUSHOMETER VALVE.
4. INSTALL WALL HUNG ADA COMPLIANT URINAL. CONNECT 2" WASTE, 1 1/2" VENT AND 3/4" CW TO FLUSHOMETER VALVE. REFER TO ARCH. DWGS. FOR FIXTURE MOUNTING HEIGHT.
5. INSTALL WALL HUNG LAVATORY. CONNECT 2" WASTE, 1 1/2" VENT AND 1/2" CW TO FAUCET SUPPLY STOP.
6. INSTALL WALL HUNG ADA COMPLIANT LAVATORY. CONNECT 2" WASTE, 1 1/2" VENT AND 1/2" CW TO FAUCET SUPPLY STOP.
7. INSTALL (N) FLOOR DRAIN. CONNECT 3" WASTE, 2" VENT AND 1/2" CW TO TRAP PRIMER CONNECTION.
8. INSTALL SERVICE SINK WITH 3" TRAP STANDARD. CONNECT 3" WASTE, 2" VENT, 3/4" CW, AND 3/4" HW TO FAUCET SUPPLY.
9. INSTALL TRAP PRIMER VALVE IN PLUMBING WALL BEHIND ACCESS PANEL.
10. (E) 4" VERTICAL WASTE STACK UP AND DOWN IN PLUMBING WALL. FOR CONTINUATION UP, SEE 2/P2.4.
11. (E) 4" VERTICAL VENT RISER UP IN PLUMBING WALL. FOR CONTINUATION UP, SEE 2/P2.4.
12. (E) 3" CW RISER UP AND 2 1/2" CW DOWN IN PLUMBING WALL. FOR CONTINUATION OF 3" CW UP, SEE 2/P2.4. RUN 2 1/2" CW DN AND OFFSET HORIZONTALLY. RUN FULL SIZE AND BRANCH 1" CW TO EACH WATER CLOSET, 1/2" CW TO EACH LAVATORY, AND 1/2" CW TO EACH TRAP PRIMER VALVE. FOR ADDITIONAL INFORMATION AND PIPE SIZING, SEE 3/P3.1.
13. (E) 2 1/2" CW RISER UP AND 2" CW DOWN IN WALL. . FOR CONTINUATION OF 2 1/2" CW UP, SEE 2/P2.4. RUN 2" CW DN AND OFFSET HORIZONTALLY IN WALL. RUN FULL SIZE AND BRANCH 3/4" CW TO EACH URINAL AND 3/4" CW TO SERVICE SINK. FOR ADDITIONAL INFORMATION AND PIPE SIZING, SEE 3/P3.1.
14. RUN (N) 3" WASTE DOWN IN WALL, 2" VENT UP IN WALL. CONNECT (N) 3" WASTE TO (E) 3" WASTE LATERAL. FIELD VERIFY EXACT LOCATION. OFFSET 2" VENT ABOVE CEILING AND CONNECT TO VENT HEADER.
15. PIPING RUN BELOW FLOOR, SLAB OR GRADE.
16. PIPING RUN ABOVE FINISHED CEILING.
17. 3" CW RISER FROM BELOW. BRANCH 2 1/2" CW WITH BALL VALVE SHUTOFF TO PLUMBING CHASE. EXTEND FULL SIZE AND BRANCH 1" CW TO EACH WATER CLOSET FLUSH VALVE, 1/2" CW TO EACH LAVATORY FAUCET SUPPLY STOP AND 1/2" CW TO EACH TRAP PRIMER VALVE. FOR ADDITIONAL INFORMATION AND PIPING SIZING, SEE 3/P3.1.
18. (E) 4" VERTICAL WASTE STACK UP AND DOWN IN PLUMBING WALL. CONNECT (N) 4" WASTE LATERAL TO (E) STACK ABOVE FLOOR IN PLUMBING WALL. FOR ADDITIONAL INFORMATION AND PIPING SIZING, SEE 4/P3.1.
19. (E) 4" VERTICAL VENT RISER UP AND DOWN IN PLUMBING WALL. CONNECT (N) 2 1/2" VENT LATERAL TO (E) STACK. FOR ADDITIONAL INFORMATION AND PIPING SIZING, SEE 4/P3.1.
20. (E) 2 1/2" CW FROM BELOW. BRANCH 2" CW WITH BALL VALVE SHUTOFF IN WALL AND 2" CW UP TO SECOND FLOOR. EXTEND FULL SIZE IN WALL AND BRANCH 3/4" CW TO EACH URINAL AND 3/4" CW TO SERVICE SINK. FOR ADDITIONAL INFORMATION AND PIPING SIZING, SEE 3/P3.1.
21. RUN 2" WASTE DOWN IN WALL, 1 1/2" VENT UP IN WALL, OFFSET ABOVE CEILING AND CONNECT TO VENT HEADER.
22. RUN 2" VENT UP IN WALL. OFFSET AND RUN FULL SIZE ABOVE CEILING.
23. RUN 3/4" HW UP AND DOWN IN WALL. BRANCH 3/4" HW AND CONNECT TO SERVICE SINK FAUCET SUPPLY.
24. REMOVE EXISTING CLEANOUT PLUG. CONNECT (N) 3" WASTE TO (E) 3" AND EXTEND BELOW FLOOR.
25. (E) 2" WASTE FROM EQUIP. ROOM FLOOR DRAIN ABOVE TO REMAIN. VERIFY EXACT LOCATION IN FIELD.
26. CONNECT (E) 2" WASTE TO (N) 4" WASTE IN PLUMBING WALL.
27. RUN 1 1/2" VENT UP IN PLUMBING WALL AND CONNECT TO VENT HEADER.
28. (E) 2 1/2" CW FROM BELOW WITH BALL VALVE SHUTOFF IN PLUMBING WALL. EXTEND FULL SIZE AND BRANCH 1" CW TO EACH FLUSHOMETER VALVE SUPPLY, 3/4" CW TO EACH LAVATORY FAUCET SUPPLY, AND 1/2" CW TO EACH TRAP PRIMER VALVE. FOR ADDITIONAL INFORMATION AND PIPING SIZING, SEE 3/P3.1.
29. (E) 4" WASTE STACK DOWN, 4" VENT THROUGH ROOF.
30. (E) 4" VENT STACK THROUGH ROOF.
31. (E) 2" CW FROM BELOW WITH BALL VALVE SHUTOFF IN WALL.
32. (E) 3/4" HW IN WALL FROM BELOW. EXTEND AND CONNECT TO SERVICE SINK FAUCET SUPPLY.
33. LOCATE CW ISOLATION SHUT-OFF VALVE BEHIND WALL ACCESS PANEL COORDINATE EXACT LOCATION WITH ARCH.
34. HORIZONTAL WASTE PIPING IN PLUMBING WALL SUPPORTED BY CLOSET CARRIERS SHALL NOT EXCEED 6'-0". PROVIDE ADDITIONAL SUPPORTS WHERE PIPE LENGTH BETWEEN CARRIERS EXCEEDS SPECIFIED LIMIT.

REVISION	DESCRIPTION	INITIAL	DATE
	AS BUILT	AB	11/30/05

ISSUED FOR PROGRESS REVIEW	08/29/03
ISSUED FOR PLAN CHECK	03/03/04
ISSUED FOR PERMIT	
ISSUED FOR BID	
ISSUED FOR CONSTRUCTION	

SEAL: LICENSED ARCHITECT THOMAS K. GUTT No. C 7,389 REN. 3-31-05 STATE OF CALIFORNIA

CONSULTANT: REGISTERED PROFESSIONAL ENGINEER MICHAEL J. LEFLER Exp. 12-31-05 No. 22,208 MECHANICAL STATE OF CALIFORNIA

INTERACTIVE RESOURCES
ARCHITECTURE • PLANNING • ENGINEERING
117 PARK PLACE
POINT RICHMOND
CALIFORNIA 94801
(510) 236-7435
(FAX) 232-5325
http://www.intres.com

PROJECT:

BUILDING NO. 18 (NORTH HALL) MODERNIZATION

COLLEGE OF SAN MATEO
3401 CSM DRIVE
SAN MATEO, CA 94402

SAN MATEO CO. COMMUNITY COLLEGE DISTRICT

LEFLER ENGINEERING, INC.
1651 Second Street
San Rafael, CA 94901
(415) 456-4220
(415) 456-1248 fax

SHEET TITLE:

BLDG 18 - GROUND FLOOR PLAN MODERNIZATION WORK

PROJ. NO.	2002-066.01
PREPARATION AND REVIEW	
DRAWN BY	MN
DESIGNER	AB
PROJ. MGR.	AB
PEER REVIEW	MJL

SHEET NUMBER:

MOD P2.4

NUMBER: OF:

Plot Date: December 22, 2005 - 2:41 pm
File Name: Z:\2002\2002-066.02\SET OF DWGS FOR OWNER 12-22-05\MECH-PLUMBING\P2.4.dwg