## System No. W-L-8019

F Rating - 1 and 2 Hr (See Items 1, 3 and 4)
T Rating - 0, 1/2, 1, 1-1/2 and 2 Hr (See Item 2)

WL 8019

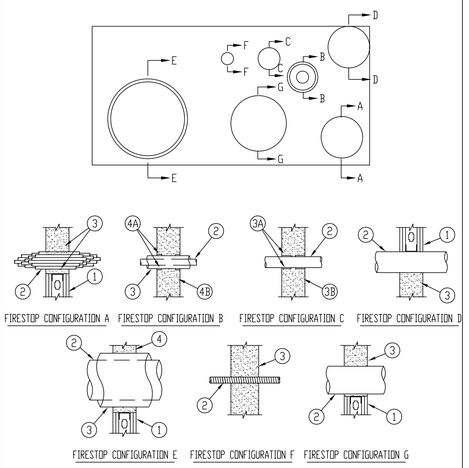


FIRESTOP SYSTEMS

Reproduced by HILTI, Inc. Courtesy of Underwriters Laboratories, Inc. January 25, 2002

CLASSIFIED C UL US

Page: 1 of 5

## System No. W-L-8019

F Rating - 1 and 2 Hr (See Items 1, 3 and 4)
T Rating - 0, 1/2, 1, 1-1/2 and 2 Hr (See Item 2)

WL 8019

1. Wall Assembly The 1 or 2 hr fire-rated gypsum board/stud wall assembly shall be constructed of the materials and in the manner described in the individual U400 Series Wall or Partition Design in the UL Fire Resistance Directory and shall include the following construction features:
   A. Studs Steel studs 3-1/2 in. deep, fabricated from 25 MSG galv steel, spaced max 24 in. OC.
   B. Gypsum Board* The gypsum board type, number of layers, fastener type and sheet orientation shall be as specified in the individual Wall and Partition Design. Max area of opening is 450 sq in with max dimension of 30 in.

The hourly F Rating of the firestop system is equal to the hourly fire rating of the wall asembly in which it is installed.

2. Through Penetrants A max of seven firestop configurations may be installed within the opening. The space between firestop configurations. Unless otherwise indicated, the space between firestop configurations and periphery of opening shall be min 3/8 in. Pipe, conduit, tubing or cables to be rigidly supported on both sides of floor or wall assembly. The T Rating of the sytem is dependent on the firestop configurations, as shown in the table below. Any combination of the following firestop configurations detailed herein may be used:

| Firestop Configuration | 1 Hr F Rating T Rating Hr | 2 Hr F Rating T Rating Hr |
|---|---|---|
| A | 0 | 1/2 |
| B | 1 | 1-1/2 |
| C | 1/2 | 1 |
| D | 0 | 0 |
| E | 1 | 2 |
| F | 0 | 0 |
| G | 0 | 0 |

Firestop Configuration A

2. Cables Max 4 in. diam tightly bundled cable. The min space between adjacent penetrants shall be 4 in. Cable bundle may be any combinatio of the following types and sizes of cables:
   G. Max 25 pair No. 24 AWG copper telephone cable with polyvinyl chloride (PVC) insulation and jacket materials.
   H. Max 7/C No. 12 AWG cable with PVC insulation and jacket materials.
   I. Multiple fiber optical communication cables with PVC jacket material and having a max outside diameter of 3/8 in.
   J. Max 3/C No. 12 AWG steel clad cables with PVC insulation and jacket materials.
   K. Max 3/C No. 8 AWG cablew with ground with PVC insulation and jacket materials.
   L. Max RG 59 coaxial cables with PVC insulation and jacket materials.
3. Fill, Void or Cavity Material* -- Foam Fill material applied within annulus flush with both surfaces of the wall. Min fill material thickness for 1 hr F Rating is 4-3/4 in. Min fill material thickness for 2 hr F Rating is 6 in.

HILTI CONSTRUCTION CHEMICALS, DIV OF

HILTI INC -- CP 620 Fire Foam

FIRESTOP SYSTEMS

Reproduced by HILTI, Inc. Courtesy of Underwriters Laboratories, Inc. January 25, 2002

CLASSIFIED C UL US

Page: 2 of 5

## System No. W-L-8019

F Rating - 1 and 2 Hr (See Items 1, 3 and 4)
T Rating - 0, 1/2, 1, 1-1/2 and 2 Hr (See Item 2)

WL 8019

Firestop Configuration B

2. Copper Tuber or Pipe Nom 1 in. diam (or smaller) Type L copper tube or nom 1 in diam (or smaller) Regulary (or heavier) copper pipe. Min space between adjacent penetrants shall be 3 in.
3. Tube Insulation - Plastics+ Nom 3/4 in. thick acrylonitrile butadiene/polyvinyl chloride (AB/PVC) flexible foam furnished in the form of tubing. The min space between adjacent penetrants shall be 1-1/2 in.

See Plastics+ (QMFZ2) category in the Plastics Recognized Component Directory for names of manufacturers. Any Recognized Component tube insulation material meeting the above specifications and having a UL 94 Flammability Classificationd 94-5VA may be used.

4. Firestop System The firestop system shall consist of the following:
   A. Fill, Void or Cavity Material* - Wrap Strip Two min 1 in. wide wrap strips applied in a single wrap, flush with both surfaces of wall.

HILTI CONSTRUCTION CHEMICALS, DIV OF

HILTI INC -- CP 645 Wrap Strip

   B. Fill, Void or Cavity Material* - Foam Fill material applied within annulus flush with both surfaces of the wall. Min fill material thickness for 1 hr F Rating is 4-3/4 in. Min fill material thickness for 2 hr F Rating is 6 in.

HILTI CONSTRUCTION CHEMICALS, DIV OF

HILTI INC -- CP 620 Fire Foam

Firestop Configuration C

2. Polyvinyl Chloride (PVC) Pipe Nom 2 in. diam (or smaller) Schedule 40 solid or cellular core PVC pipe for use in closed (process or supply) or vented (drain, waste or vent) piping system. The min space between non-metallic penetrants shall be 1 in. The min space between metallic penetrants shall be 3-1/2 in.
3. Firestop System The firestop shall consist of the following:
   A. Fill, Void or Cavity Material* - Wrap Strip Two min 2 in. wide wrap strips applied in a single wrap, flush with both surfaces of wall.

HILTI CONSTRUCTION CHEMICALS, DIV OF

HILTI INC -- CP 645 Wrap Strip

   B. Fill, Void or Cavity Material* - Foam Fill material applied within annulus flush with both surfaces of the wall. Min fill material thickness for 1 hr F Rating is 4-3/4 in. Min fill material thickness for 2 hr F Rating is 6 in.

HILTI CONSTRUCTION CHEMICALS, DIV OF

HILTI INC -- CP 620 Fire Foam

FIRESTOP SYSTEMS

Reproduced by HILTI, Inc. Courtesy of Underwriters Laboratories, Inc. January 25, 2002

CLASSIFIED C UL US

Page: 3 of 5

## System No. W-L-8019

F Rating - 1 and 2 Hr (See Items 1, 3 and 4)
T Rating - 0, 1/2, 1, 1-1/2 and 2 Hr (See Item 2)

WL 8019

Firestop Configuration D

2. Through Penetrant One metallic pipe, conduit or tube to be installed either concentrically or eccentrically within the firestop system. The min annular space between the pipe, conduit or tube and the periphery of the opening shall be min. 0 in. (point contact). The annular space between adjacent penetrants shall be min 3-1/2 in. The following types and sizes of metallic pipes, conduits or tubes may be used:
   Steel Pipe Nom 4 in. diam (or smaller) Schedul 10 (or heavier) steel pipe.
   Iron Pipe Nom 4 in. diam (or smaller) cast or ductile iron pipe.
   Conduit Nom 4 in. diam (or smaller) rigid steel conduit.
   Conduit Nom 4 in. diam (or smaller) steel electrical metallic conduit.
   Copper Tubing Nom 4 in. diam (or smaller) Type L (or heavier) copper tubing.
   Copper Pipe Nom 4 in. diam (or smaller) Regular (or heavier) copper pipe.
3. Fill, Void or Cavity Material* - Foam Fill material applied within annulus flush with both surfaces of the wall. Min fill material thickness for 1 hr F Rating is 4-3/4 in. Min fill material thickness for 2 hr F Rating is 6 in.

HILTI CONSTRUCTION CHEMICALS, DIV OF

HILTI INC -- CP 620 Fire Foam

Firestop Configuration E

2. Steel Pipe Nom 8 in. diam (or smaller) Schedule 40 (or heavier) steel pipe.
3. Pipe Covering Materials* Nom 1-1/2 in. thick hollow cylindrical heavy density (min 3.5 pcf) glass fiber units jacketed on the outside with an all-service jacket. Longitudinal joints sealed with metal fasteners or factory-applied, self-sealing lap tape. Transverse joints secured with metal fasteners of with butt tape supplied with product. The min space between adjacent penetrants shall be 2 in.

See Pipe and Equipment Covering - Materials (BRGU) Category in the Building Materials Directory for names of manufacturers. Any pipe covering meeting the above specifications and bearing the UL Classification Marking with a Flame Spread Index of 25 or less and a Smoke Developed Index of 50 or less may be used.

4. Fill, Void or Cavity Mateiral* - Foam Fill material applied within annulus flush with both surfaces of the wall. Min fill material thickness for 1 hr F Rating is 4-3/4 in. Min fill material thickness for 2 hr F Rating is 6 in.

HILTI CONSTRUCTION CHEMICALS, DIV OF

HILTI INC -- CP 620 Fire Foam

Firestop Configuration F

2. Flexible Conduit Nom 1 in. diam (or smaller) flexible steel conduit. The min space between adjacent penetrants shall be 3-1/2 in.
3. Fill, Void or Cavity Mateiral* - Foam Fill material applied within annulus flush with both surfaces of the wall. Min fill material thickness for 1 hr F Rating is 4-3/4 in. Min fill material thickness for 2 hr F Rating is 6 in.

HILTI CONSTRUCTION CHEMICALS, DIV OF

HILTI INC -- CP 620 Fire Foam

FIRESTOP SYSTEMS

Reproduced by HILTI, Inc. Courtesy of Underwriters Laboratories, Inc. January 25, 2002

CLASSIFIED C UL US

Page: 4 of 5

## System No. W-L-8019

F Rating - 1 and 2 Hr (See Items 1, 3 and 4)
T Rating - 0, 1/2, 1, 1-1/2 and 2 Hr (See Item 2)

WL 8019

Firestop Configuration G

2. Steel Duct Nom 6 in. diam (or smaller) No. 28 gauge (or heavier) galve steel duct. The min space between adjacent penetrants shall be 1-1/2 in.
3. Fill, Void or Cavity Material* - Foam Fill material applied within annulus flush with both surfaces of the wall. Min fil material thickness for 1 hr F Rating is 4-3/4 in. Min fill material thickness for 2 hr F Rating is 6 in.

HILTI CONSTRUCTION CHEMICALS, DIV OF

HILTI INC -- CP 620 Fire Foam

*Bearing the UL Classification Mark

FIRESTOP SYSTEMS

Reproduced by HILTI, Inc. Courtesy of Underwriters Laboratories, Inc. January 25, 2002

CLASSIFIED C UL US

Page: 5 of 5

## System No. W-L-1249

F Ratings - 1 and 2 Hr (See Items 1 and 3)
T Rating - 1/2 Hr

WL 1249

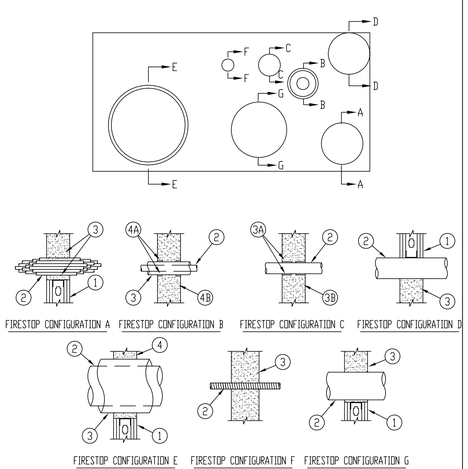


FIRESTOP SYSTEMS

Reproduced by HILTI, Inc. Courtesy of Underwriters Laboratories, Inc. December 07, 2001

CLASSIFIED C UL US

## System No. W-L-1248

F Rating - 1 Hr
T Rating - 0 Hr

WL 1248

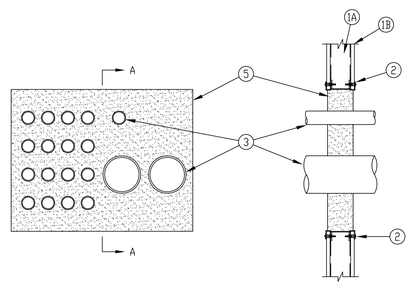


1. Wall Assembly The fire-rated gypsum wallboard/stud wall assembly shall be constructed of the materials and in the manner specified in the individual U300 or U400 Series Wall and Partition Designs in the UL Fire Resistance Directory and shall include the following construction features:
   A. Studs Wall framing may consist of either wood studs or steel channel studs. Wood studs to consist of nom 2 by 4 in. lumber spaced 16 in. OC. Steel studs to be min 3-5/8 in. wide and spaced max 24 in. OC. Additional framing members to be installed in stud cavity containing the through penetrating item to form a rectangular box around the penetrants.
   B. Gypsum Board* One layer of nom 5/8 in. thick gypsum wallboard, as specified in the individual Wall and Partition Design. Max area of opening is 1024 sq in. with max dimension of 32 in. for steel stud walls. Max width of opening in wood stud walls is limited to 14-1/2 in.
2. Angle Clips Nom 1-1/2 in. by 1-1/2 in. by No. 22 gauge (or heavier) steel angles attached to all four sides of the opening on both sides of the wall. The angle shall be attached to the wall with min 1-5/8 in. long Type S self-drilling, self-tapping bugle-head steel screws spaced max of 2 in. from each end and at a max of 5 in. OC.

FIRESTOP SYSTEMS

Reproduced by HILTI, Inc. Courtesy of Underwriters Laboratories, Inc. May 22, 2001

CLASSIFIED C UL US

Page: 1 of 2

## System No. W-L-1248

F Rating - 1 Hr
T Rating - 0 Hr

WL 1248

3. Through Penetrants The space between pipes, conduits or tubing shall be min 1 in. when diam of through penetrant is 1-1/2 in. or smaller and 2-1/2 in. when diam of through penetrant is larger than 1-1/2 in. The space between pipes, conduits or tubing and periphery of opening shall be min 1 in. when diam of through penetrant is 1-1/2 in. or smaller and 2-1/2 in. when diam of through penetrant is larger than 1-1/2 in. Pipe, conduit or tubing to be rigidly supported on both sides of wall assembly. The following types and sizes of metallic pipes, conduits or tubing may be used:
   A. Steel Pipe Nom 6 in. diam (or smaller) Schedule 10 (or heavier) steel pipe.
   B. Iron Pipe Nom 6 in. diam (or smaller) cast or ductile iron pipe.
   C. Conduit Nom 6 in. diam (or smaller) steel conduit or nom 4 in. diam (or smaller) steel electrical metallic tubing.
   D. Copper Tubing Nom 3 in. diam (or smaller) Type L (or heavier) copper tubing.
   E. Copper Pipe Nom 3 in. diam (or smaller) Regular (or heavier) copper pipe.
4. Forms (Not Shown) -- Used as a form to prevent leakage of fill material during installation. Forms to be a rigid sheet material, cut to fit the contour of the penetrating items and fastened to both sides of wall. Forms to be removed after fill material has cured.
5. Fill, Void or Cavity Material*--Mortar Min 4-1/2 in. thickness of fill material applied within the annulus, centered within the wall. Mortar is mixed at a rate of 2-1/2 parts dry mix to one part water by volume in accordance with the fill material manufacturer's installation instructions.

HILTI CONSTRUCTION CHEMICALS, DIV OF

HILTI INC -- CP637 Mortar

*Bearing the UL Classification Mark

FIRESTOP SYSTEMS

Reproduced by HILTI, Inc. Courtesy of Underwriters Laboratories, Inc. May 22, 2001

CLASSIFIED C UL US

Page: 2 of 2

## System No. W-L-5028

F Ratings - 1 and 2 Hr (See Item 1)
T Ratings - 3/4

WL 5028

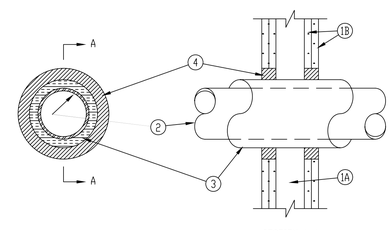


1. Wall Assembly -- The 1 or 2 hr fire-rated gypsum wallboard/stud wall assembly shall be constructed of the materials and in the manner specified in the individual U300 or U400 Series Wall and Partition Designs in the UL Fire Resistance Directory and shall include the following construction features:
   A. Studs -- Wall framing may consist of either wood studs or steel channel studs. Wood studs to consist of nom 2 by 4 in. lumber spaced 16 in. OC. Steel studs to be min 2-1/2 in. wide and spaced max 24 in. OC.
   B. Gypsum Board* -- 5/8 in. thick, 4 ft wide with square or tapered edges. The gypsum wallboard type, thickness, number of layers, fastener type and sheet orientation shall be as specified in the individual Wall and Partition Design. Max diam of opening is 7-1/2 in.

The hourly F Rating of the firestop system is equal to the hourly fire rating of the wall assembly in which it is installed.

2. Through Penetrants -- One metallic pipe or tubing to be centered within the firestop system. Pipe or tubing to be rigidly supported on both sides of wall assembly. The following types and sizes of metallic pipes or tubing may be used:
   A. Steel Pipe -- Nom 4 in. diam (or smaller) Schedule 40 (or heavier) steel pipe.
   B. Copper Tubing -- Nom 2 in. diam (or smaller) Type L (or heavier) copper tubing.
   C. Copper Pipe -- Nom 2 in. diam (or smaller) Regular (or heavier) copper pipe.

FIRESTOP SYSTEMS

Reproduced by HILTI, Inc. Courtesy of Underwriters Laboratories, Inc. January 09, 2003

CLASSIFIED C UL US

Page: 1 of 2

## System No. W-L-5028

F Ratings - 1 and 2 Hr (See Item 1)
T Ratings - 3/4

WL 5028

3. Tube Insulation -- Plastics+ -- Nom 3/4 in. thick acrylonitrile butadiene/polyvinyl chloride (AB/PVC) flexible foam furnished in the form of tubing. An annular space of min 0 in. (point contact) to max 1-1/2 in. is required within the firestop system.

See Plastics+ (QMFZ2) category in the Recognized Component Directory for names of manufacturers. Any Recognized Component tube insulation material meeting the above specifications and having a UL 94 Flammability Classification of 94-5VA may be used.

The hour T Rating of the firestop system is dependent on the hourly fire rating of the wall assembly in which it is installed, the size and type of through penetrant and the pipe covering thickness, as shown in the table below:

| Wall Assembly Rating Hr | Type + hrough Penetrant | Max Diam In. |
|---|---|---|
| 1 | A | 4 |
| 1 | A, B or C | 2 |
| 2 | A | 4 |
| 2 | A, B or C | 2 |

+Indicates penetrant type as itemized in Item 2.

4. Fill, Void or Cavity Material* -- Sealant -- Min 5/8 in. thickness of fill material applied within the annulus, flush with both surfaces of wall. At the point contact location between pipe covering and gypsum wallboard, a min 1/2 in. diam bead of fill material shall be applied at the pipe covering/gypsum wallboard interface on both surfaces of wall.

HILTI CONSTRUCTION CHEMICALS, DIV OF
HILTI INC -- FS-ONE Sealant
*Bearing the UL Classification Mark

FIRESTOP SYSTEMS

Reproduced by HILTI, Inc. Courtesy of Underwriters Laboratories, Inc. January 09, 2003

CLASSIFIED C UL US

Page: 2 of 2

**NOTE:**

VERIFY CONDITIONS IN THE FIELD WITH RESPECT TO SIZE, SPACING AND CONFIGURATION OF PENETRATIONS. PROVIDE 1 HOUR FIRESTOPING SYSTEMS AS REQUIRED.

ChevronTexaco
Chevron Energy Solutions Company
A Division of Chevron U.S.A. Inc.
SAN FRANCISCO OFFICE
345 CALIFORNIA ST., 25th FLOOR
SAN FRANCISCO, CA 94104-2603

| REV | DATE | BY | DESCRIPTION |
|---|---|---|---|
| | 11/01/06 | | CLOSEOUT DOCUMENTS |

LICENSED ARCHITECT
Christopher Noll
REN. 12/31/05
NO. C15916
STATE OF CALIFORNIA

IDENTIFICATION STAMP
DIVISION OF THE STATE ARCHITECT
FILE # 41-C1
APPLICATION NUMBER 01 106992
DATE

Canada College Modernization
CENTRAL PLANT RENOVATION
San Mateo County Community College District

Fire Rated Details

SCALE
PROJECT NO.
DESIGNED BY
DRAWN BY
CHECKED BY
DATE 6/3/05
LAYOUT TAB
ARCH'S
ARCH'S (CONT)
ARCH'S (CONT)
FILE NAME

A4.0