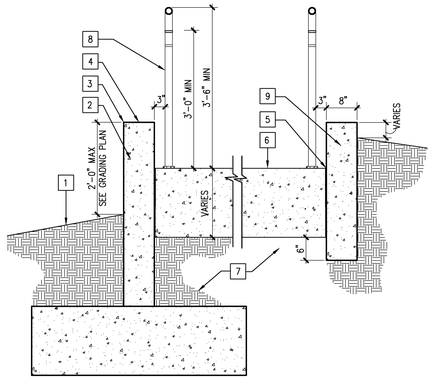

1. FINISH SURFACE / FINISH GRADE PER PLAN
2. C.I.P. CONCRETE WALL W/ARDEX FINISH. SEE LAYOUT AND MATERIALS PLANS. STEEL REINFORCEMENT PER STRUCTURAL ENGINEER. (14 / L4.01)
3. 1/8" EASED EDGE. TYP ALL EDGES.
4. TOP OF WALL, PER GRADING PLANS.
5. EXPANSION JOINT (03 / L4.01) (07 / L4.01)
6. CONCRETE STAIRS (02 / L4.02)
7. BASE MATERIAL AND COMPACTED SUB GRADE PER GEOTECHNICAL REPORT
8. HANDRAIL AT STAIRS (01 / –)
9. CHEEK WALL AT CONCRETE STAIRS. (03 / L4.02)

NOTE:
SEE STRUCTURAL FOR FOOTING DESIGN & REINFORCEMENT. (19 / S0.2)

SECTION AT BUILDING 1 STAIRS | 3/4" = 1'-0" | CRW-T6X | 17

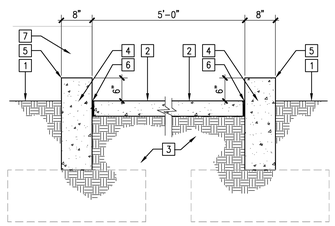

1. FINISH SURFACE / FINISH GRADE PER PLAN
2. CONCRETE SLOPED WALK (01 / L4.01)
3. BASE MATERIAL AND COMPACTED SUB GRADE PER GEOTECHNICAL REPORT
4. C.I.P. CONCRETE CHEEK WALL. SEE STRUCTURAL DETAIL FOR FOOTING DESIGN AND REINFORCEMENT (17 / S0.2)
5. 1/8" EASED EDGE. TYP. ALL EDGES
6. EXPANSION JOINT (07 / L4.01)
7. CONCRETE RETAINING WALL, TYPE 4 BEYOND (14 / L4.01)

CHEEK WALL AT SLOPED WALK | 3/4" = 1'-0" | NAME | 13

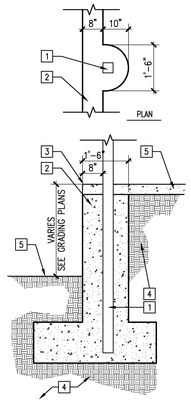

1. HSS 2 1/2" SQ X 12 GA. TUBE STEEL POST W/WELDED STEEL CAP. HSS 4" X 4" X 1/4" POST AT ALL ENDPOSTS AND CHANGE OF DIRECTION.
2. CAST IN PLACE WALL.
3. TOP OF WALL ELEVATION PER GRADING PLAN.
4. BASE MATERIAL AND COMPACTED SUBGRADE PER GEOTECH REPORT.
5. FINISH SURFACE OR FINISH GRADE, PER CIVIL DRAWINGS.

NOTES:
1. REINFORCEMENT AND FOOTING DESIGN PER STRUCTURAL DRAWINGS.

(12 / S0.2) SIM. (20 / S0.2) SIM.

CONCRETE RETAINING WALL WITH TUBE STEEL FENCE | 1/2" = 1'-0" | CRW-T5X | 09

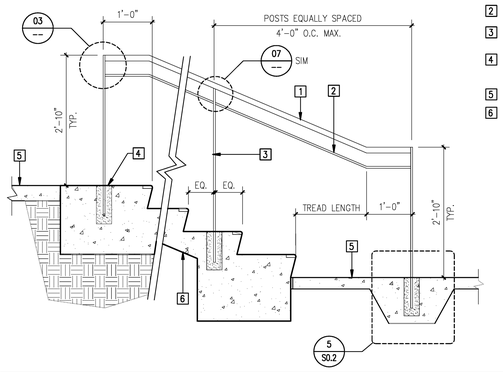

1. TOP RAIL: 1-1/2" O.D. STEEL PIPE.
2. INTERMEDIATE RAIL, 1-1/2" x 1/2" SOLID STEEL STOCK.
3. 1-1/2" x 3/4" SOLID STOCK STEEL POST. TYP. INSTALL 3" CLEAR OF EDGE OF PAVING
4. PATCH CORE AND NON-SHRINK GROUT WITH CONCRETE TO MATCH ADJACENT BROOM FINISH CONCRETE.
5. FINISH SURFACE
6. C.I.P. CONCRETE STAIRS (02 / L4.02)

NOTES:
1. ALL COMPONENTS ARE TO BE GALVANIZED STEEL.
2. GRIND ALL WELDS SMOOTH AND POLISH.
3. 1/8" EDGES TYPICAL ALL CORNERS.
4. ALL HANDRAILS TO BE 3" FROM FACE OF WALL UNLESS OTHERWISE NOTED ON PLAN.
5. PROVIDE HANDRAILS ON BOTH SIDES OF STAIRS TYP. AS SHOWN ON PLANS.

HANDRAIL AT STAIRS | 3/4"=1'-0" | DT02FE44 | 01

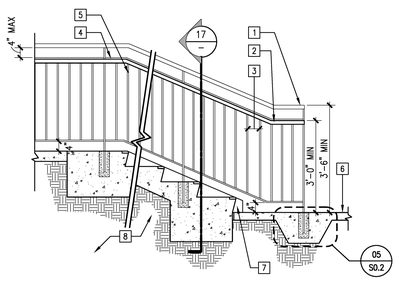

1. GALVANIZED GUARDRAIL: 1-1/2" STEEL PIPE.
2. HANDRAIL, 1-1/2" O.D. STEEL PIPE.
3. 4" MAX O.C.
4. 1 1/2" X 1/2" GALVANIZED BAR STOCK, HORIZONTAL.
5. 1 1/2" X 3/4" GALVANIZED BAR STOCK VERTICAL SUPPORTS
6. FINISH SURFACE
7. C.I.P. CONCRETE CHEEK WALL (03 / L4.02)
8. BASE MATERIAL AND COMPACTED SUBGRADE PER GEOTECH REPORT

NOTES:
1. ALL COMPONENTS ARE TO BE GALVANIZED STEEL.
2. GRIND ALL WELDS SMOOTH AND POLISH.
3. 1/8" EDGES TYPICAL ALL CORNERS.
4. ALL HANDRAILS TO BE 3" FROM FACE OF WALL UNLESS OTHERWISE NOTED ON PLAN.
5. PROVIDE HANDRAILS ON BOTH SIDES OF STAIRS TYP. AS SHOWN ON PLANS.
6. PATCH CORE AND COVER NON-SHRINK GROUT WITH CONCRETE TO MATCH ADJACENT BROOM FINISH CONCRETE.

(05 / S0.2)

GUARDRAIL AND HANDRAIL AT BUILDING 1 STAIRS | 1/2" = 1'-0" | DT02WD54X6 | 18

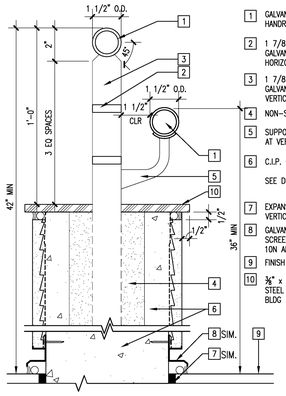

1. GALVANIZED GUARDRAIL / HANDRAIL
2. 1 7/8" X 1/2" GALVANIZED BAR STOCK, HORIZONTAL
3. 1 7/8" X 3/4" GALVANIZED BAR STOCK VERTICAL SUPPORTS
4. NON-SHRINK GROUT
5. SUPPORT ATTACHMENT AT VERTICALS
6. C.I.P. CONCRETE WALL SEE DETAIL (15 / L4.01)
7. EXPANSION JOINT AT VERTICAL SURFACE
8. GALVANIZED WEEP SCREED. SEE BLDG 10N ARCHITECUTRE
9. FINISH SURFACE
10. 3/8" x 10" CONTINUOUS STEEL PLATE – SEE BLDG 10N ARCH. (01 / A82.2)

GUARDRAIL/HANDRAIL AT RETAINING WALL | 3" = 1'-0" | DT05STO3 | 14

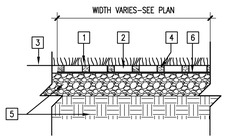

1. TURF FROM SOD, 1/2" THICK
2. TUFFTRACK GRASSROAD PAVERS # TT-24 BY NDS, INC. SEE SHEET L0.1 FOR MANUFACTURER'S LIST. INSTALL TOP OF PAVER FLUSH WITH ADJACENT GRADE.
3. ADJACENT GRADE / FINISH SURFACE. FLUSH WITH SOD SOIL
4. FILL CELLS WITH SANDY LOAM TOPSOIL. WATER IN THOROUGHLY TO COMPACT SOIL. SOIL FINISH GRADE WITHIN CELLS SHALL BE FLUSH W/TOP OF PAVER CELL.
5. BASE MATERIAL AND COMPACTED SUBGRADE PER CIVIL PLANS.
6. HYDROGEN POLYMER MIX LAYER PER MANUF.

GRASSROAD PAVERS | 1-1/2" = 1'-0" | DT02PV15 | 10

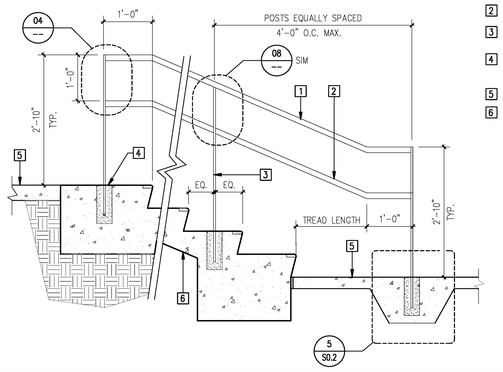

1. TOP RAIL: 1-1/2" O.D. STEEL PIPE.
2. INTERMEDIATE RAIL, 1-1/2" O.D. STEEL PIPE.
3. 1-1/2" x 3/4" SOLID STOCK STEEL POST. TYP. INSTALL 3" CLEAR OF EDGE OF PAVING
4. PATCH CORE AND NON-SHRINK GROUT WITH CONCRETE TO MATCH ADJACENT BROOM FINISH CONCRETE.
5. FINISH SURFACE
6. C.I.P. CONCRETE STAIRS (02 / L4.02)

NOTES:
1. ALL COMPONENTS ARE TO BE GALVANIZED STEEL.
2. GRIND ALL WELDS SMOOTH AND POLISH.
3. 1/8" EDGES TYPICAL ALL CORNERS.
4. ALL HANDRAILS TO BE 3" FROM FACE OF WALL UNLESS OTHERWISE NOTED ON PLAN.
5. PROVIDE HANDRAILS ON BOTH SIDES OF STAIRS TYP. AS SHOWN ON PLANS.

HANDRAIL AT SPECTATOR SEATING | 3/4"=1'-0" | DT02FE44X | 02

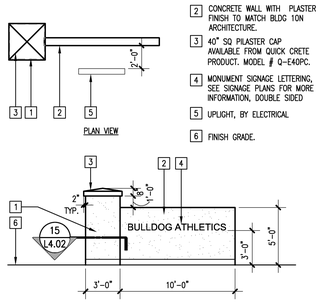

1. 3" X 3" CMU BLOCK PILASTER WITH INTREGRAL COLOR PLASTER. COLOR TO BE MARBLE WHITE #10401. FINISH TO MATCH BLDG 10N ARCHITECTURE. CONTRACTOR TO VERIFY ACTUAL COLOR AND FINISH.
2. CONCRETE WALL WITH PLASTER FINISH TO MATCH BLDG 10N ARCHITECTURE.
3. 40" SQ PILASTER CAP AVAILABLE FROM QUICK CRETE PRODUCT. MODEL # Q-E40PC.
4. MONUMENT SIGNAGE LETTERING, SEE SIGNAGE PLANS FOR MORE INFORMATION, DOUBLE SIDED
5. UPLIGHT, BY ELECTRICAL
6. FINISH GRADE.

BULLDOG ATHLETICS SIGN | 3/16" = 1'-0" | NAME | 23

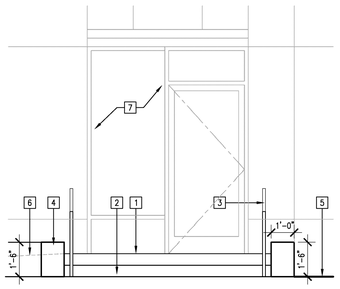

1. FINISH SURFACE
2. C.I.P. CONCRETE STAIRS (02 / L4.02)
3. HANDRAIL AT STAIRS (01 / –) (15 / –)
4. CONCRETE SEATWALL (16 / L4.01)
5. PLANTER AREA
6. SLOPED WALK BEYOND
7. BUILDING 10N BEYOND

SEAT WALL AT STAIRS | 3/8" = 1'-0" | NAME | 19

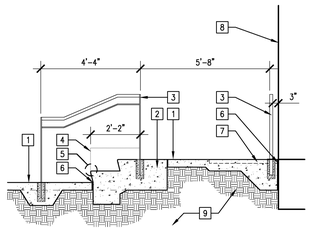

1. FINISH SURFACE
2. C.I.P. CONCRETE STAIRS (02 / L4.02)
3. HANDRAIL AT STAIRS (01 / –)
4. CONCRETE SEATWALL BEYOND (16 / L4.01)
5. ALIGN STAIR NOSING WITH FACE OF WALL.
6. EXPANSION JOINT (07 / L4.01)
7. WALK OFF MAT PER BLDG 10N ARCHITECTURE (15 / A81.1)
8. BUILDING 10N WALL PER ARCHITECTURE
9. BASE MATERIAL AND COMPACTED SUBGRADE PER GEOTECHNICAL REPORT

BUILDING 10N WALL SECTION | 3/8" = 1'-0" | NAME | 15

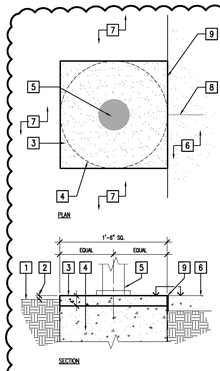

1. FINISH GRADE
2. 1 1/2" Ø SHRUB/GROUND COVER 1" Ø TURF
3. CONCRETE PAVING. FINISH TO MATCH ADJACENT CONCRETE WALK
4. FOOTING BELOW, SEE ELECTRICAL PLANS (1 / E0.04)
5. LIGHTING BOLLARD BASE, BASE COVER AND FOOTING. SEE ELECTRICAL PLANS FOR EXACT TYPE AND DIMENSIONS.
6. ADJACENT FINISH SURFACE PER PLAN
7. ADJACENT FINISH GRADE PER PLAN
8. CONTROL JOINT FROM ADJ. PAVING WHERE APPLICABLE.
9. EXPANSION JOINT (03 / L4.01)

CONC. PAD AT BOLLARD LIGHT BASE | 1/2"=1'-0" | SAME | 11

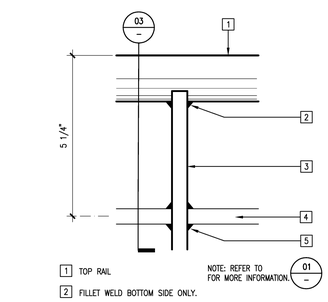

1. TOP RAIL
2. FILLET WELD BOTTOM SIDE ONLY.
3. STEEL POST
4. INTERMEDIATE RAIL
5. CONTINUOUS G.T.A.W. FILLET WELD TYP. ALL INTERMEDIATE RAILS.

NOTE: REFER TO FOR MORE INFORMATION. (01 / –)

HANDRAIL ELEVATION | 6" = 1'-0" | DT02FE64 | 07

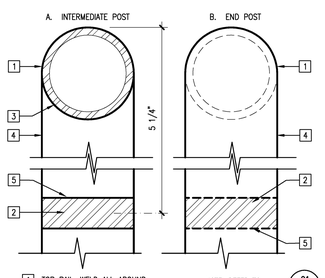

1. TOP RAIL, WELD ALL AROUND
2. INTERMEDIATE RAIL
3. FILLET WELD BOTTOM ONLY.
4. STEEL POST.
5. CONTINUOUS G.T.A.W. FILLET WELD. TYP. ALL INTERMEDIATE RAILS.

NOTE: REFER TO FOR MORE INFORMATION (01 / –)

HANDRAIL - TOP SECTION | FULL | DT02FE61 | 03

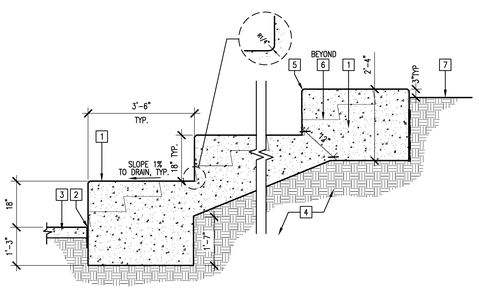

1. CAST IN PLACE RETAINING WALL PER LAYOUT AND MATERIALS PLAN
2. EXPANSION JOINT (07 / L4.01)
3. CONCRETE PAVING (01 / L4.01)
4. BASE MATERIAL AND COMPACTED SUBGRADE PER GEOTECHNICAL REPORT
5. 1/8" EASED EDGE, TYPICAL ALL EDGES
6. C.I.P. CONCRETE STAIRS (02 / L4.02) (12 / –)
7. FINISH GRADE

NOTE:
1. REINFORCEMENT AND FOOTING DESIGN PER STRUCTURAL DRAWINGS. (18 / S0.2)
2. NOSE OF STAIR TREAD TO ALIGN WITH FACE OF SPECTATOR SEATING, TYP.

SPECTATOR SEATING | 1/2" = 1'-0" | CRW-T3 | 20

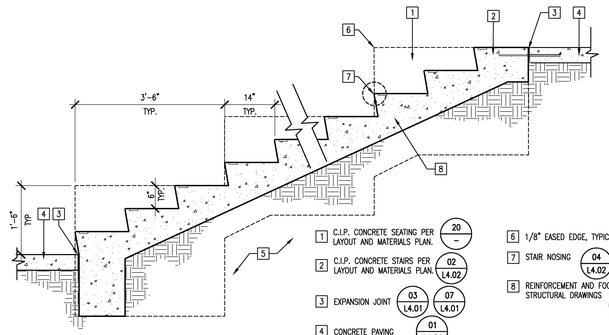

1. C.I.P. CONCRETE SEATING PER LAYOUT AND MATERIALS PLAN. (20 / –)
2. C.I.P. CONCRETE STAIRS PER LAYOUT AND MATERIALS PLAN. (02 / L4.02)
3. EXPANSION JOINT (03 / L4.01) (07 / L4.01)
4. CONCRETE PAVING (01 / L4.01)
5. BASE MATERIAL AND COMPACTED SUBGRADE PER GEOTECHNICAL REPORT
6. 1/8" EASED EDGE, TYPICAL ALL EDGES.
7. STAIR NOSING (04 / L4.02)
8. REINFORCEMENT AND FOOTING DESIGN PER STRUCTURAL DRAWINGS (14 / S0.2)

NOTE: NOSE OF STAIR TREAD TO ALIGN WITH FACE OF SPECTATOR SEATING, TYP.

STAIRS AT SPECTATOR SEATING | 3/4" = 1'-0" | CRW-T202 | 12

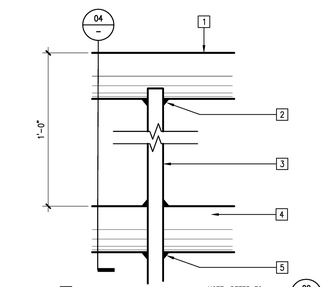

1. TOP RAIL
2. FILLET WELD BOTTOM SIDE ONLY.
3. STEEL POST
4. INTERMEDIATE RAIL
5. CONTINUOUS G.T.A.W. FILLET WELD TYP. ALL INTERMEDIATE RAILS.

NOTE: REFER TO FOR MORE INFORMATION. (02 / –)

HANDRAIL ELEVATION | 6" = 1'-0" | DT02FE64 | 08

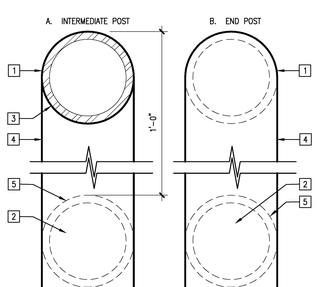

1. TOP RAIL, WELD ALL AROUND.
2. INTERMEDIATE RAIL.
3. FILLET WELD BOTTOM ONLY.
4. STEEL POST.
5. CONTINUOUS G.T.A.W. FILLET WELD. TYP. ALL INTERMEDIATE RAILS.

NOTE: REFER TO FOR MORE INFORMATION (02 / –)

HANDRAIL - TOP SECTION | FULL | DT02FE61X2 | 04

McCarthy Building Companies, Inc
343 Sansome Street, 14th Floor
San Francisco, California 94104
P 415 364-1339
F 415 397-5999

REGISTERED LANDSCAPE ARCHITECT
KEVIN MICHAEL SULLIVAN
Signature
NO. 2188
RENEWAL 5-31-10
04-09-09
Date
STATE OF CALIFORNIA

IDENTIFICATION STAMP
DIV. OF THE STATE ARCHITECT
OFFICE OF REGULATION SERVICE
APPL. #: 01-110097
AC. _____ FLS _____ SS _____
DATE _____
FILE NUMBER:

This and all other project documents and all ideas, aesthetics and designs incorporated therein are instruments of service. All project documents are the registered property of LPA, INC. and LPA's Consultants and may not be used by any party for any project or purpose except as described in the contractual agreement between McCarthy and the District. LPA hereby gives formal notice that any such project document use, reproduction or modification (misuse) is not only unlawful but automatically binds all parties involved with misuse to fully indemnify and defend LPA and LPA's Consultants to the maximum legal extent against all losses, demands, claims or liabilities. Project documents are extracted from project data models. Project documents are representations of work and are not a representation of as-built or existing conditions. LPA and LPA's Consultants make no representations concerning the accuracy of documents and are not responsible for any discrepancies between project documents and the existing conditions.

© Copyright 2008

College of San Mateo
Site Package
San Mateo, CA

Developed for
San Mateo County Community College District

Revision	Description	Date
	DSA SUBMITTAL	19 SEPT 2008
	DSA FINAL	09 APRIL 2009
	BULLETIN 6 (B17 COURTYARD)	DEC 11 2009

Job. No.	27082.30
Date	09 APRIL 2009
Drawn by	AQ, RF
Checked by	SM
Scale	AS SHOWN

CONSTRUCTION DETAILS

L4.03

W:\2007\27082\30\CADD\Landscape\L-403CD.dwg, 12/10/2009 12:51:50 PM, kengell