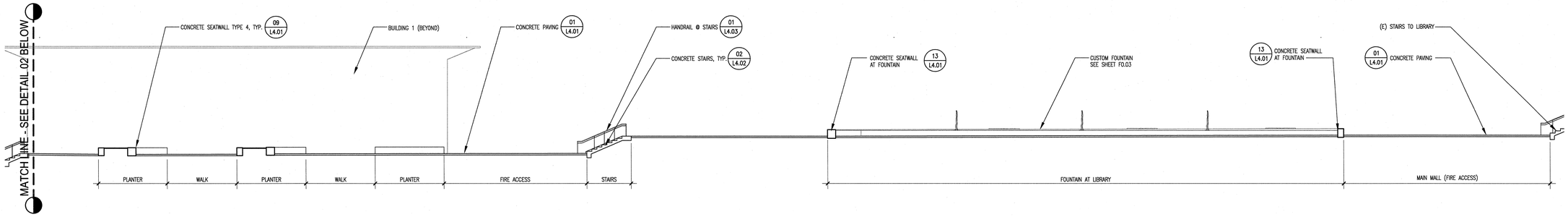

EAST/WEST SECTION THROUGH FOUNTAIN PLAZAS | 1" = 10'-0" | 01

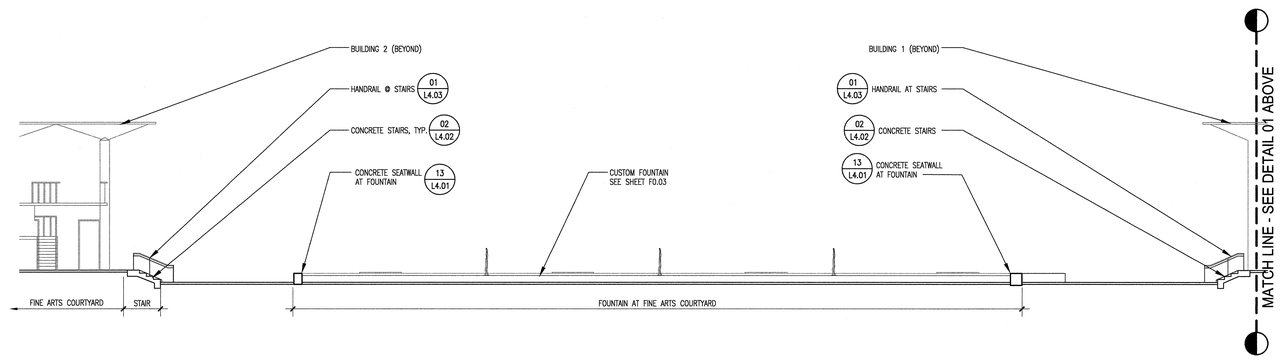

EAST/WEST SECTION THROUGH FOUNTAIN PLAZAS | 1" = 10'-0" | 02

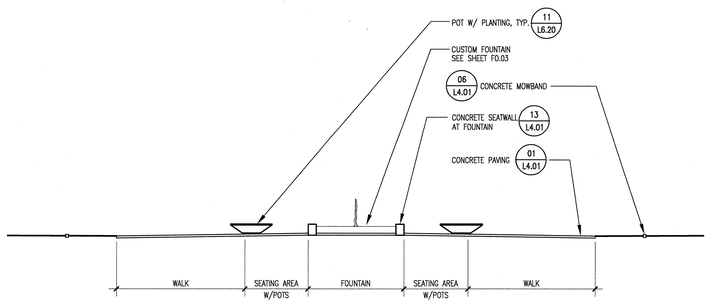

NORTH/SOUTH SECTION THROUGH FOUNTAIN AT LIBRARY | 1" = 10'-0" | 03

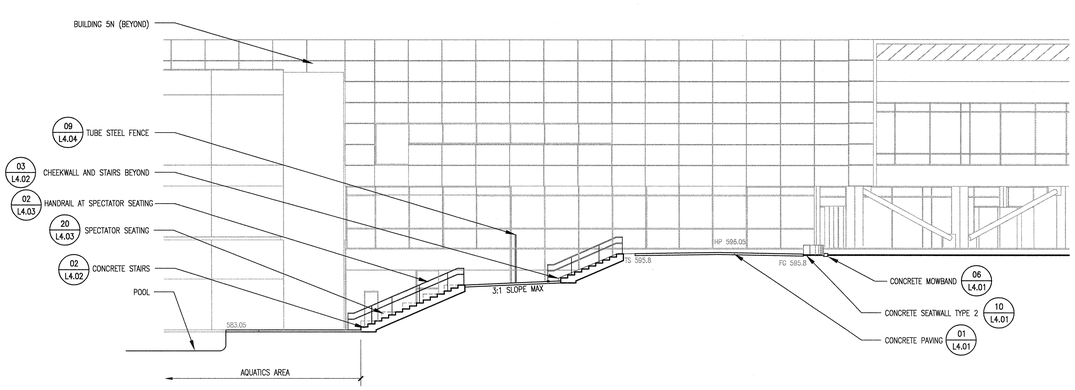

NORTH/SOUTH SECTION THROUGH POOL AREA | 1" = 10'-0" | 04

McCarthy Building Companies, Inc.
343 Sansome Street, 14th Floor
San Francisco, California 94104
P 415 | 364-1339
F 415 | 397-5999

LICENSED ARCHITECT
JAMES ARTHUR G. KEKUNAOA
No. D 14599
RENEWAL 5-31-10
STATE OF CALIFORNIA

REGISTERED LANDSCAPE ARCHITECT
KEVIN ANTHONY SULLIVAN
Signature
NO. 2188
RENEWAL 5-31-10
04-09-09
Date
STATE OF CALIFORNIA

IDENTIFICATION STAMP
DIV. OF THE STATE ARCHITECT
OFFICE OF REGULATION SERVICE
APPL. #: 01-110097
AC. FLS SS
DATE APR 09 2009
FILE NUMBER:

This and all other project documents and all ideas, aesthetics and designs incorporated therein are instruments of service. All project documents are the registered property of LPA, INC. LPA and LPA's Consultants hereby reserve all rights of any kind or purpose except as described in the contract or agreement between McCarthy and the District. LPA hereby gives formal notice that any such project document use, reproduction or modification (misuse) is not only unlawful but automatically binds all parties involved with misuse to fully indemnify and defend LPA and LPA's Consultants to the maximum legal extent against all losses, demands, claims or liabilities incurred or sustained as the result of such illegal misuse. Project documents represent design intent of work and are not a representation of as-built or existing conditions. LPA and LPA's Consultants make no representations concerning the accuracy of documents and are not responsible for any discrepancies between project documents and the existing conditions.

© Copyright 2008

College of San Mateo
Site Package
San Mateo, CA

Developed for
San Mateo County Community College District

Revision	Description	Date

Revision	Description	Date
	DSA SUBMITTAL	19 SEPT 2008
	DSA FINAL	09 APRIL 2009

Job. No.	27082.30
Date	09 APRIL 2009
Drawn by	AG, RF
Checked by	SM
Scale	AS SHOWN

SITE SECTIONS

L3.04