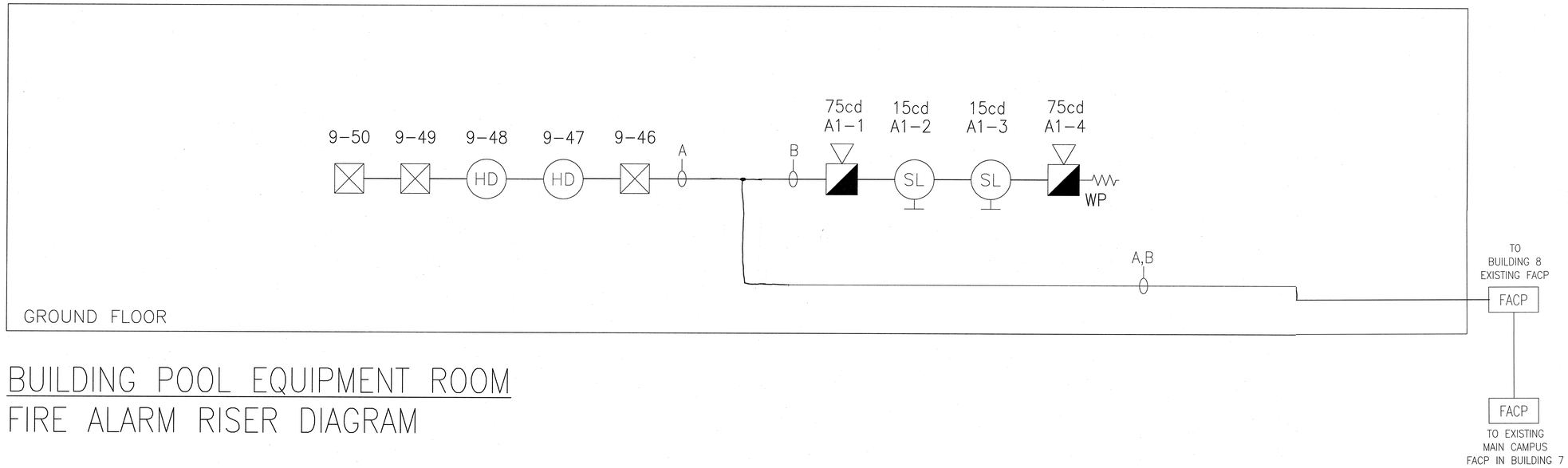

BUILDING POOL EQUIPMENT ROOM
FIRE ALARM RISER DIAGRAM

POOL ROOM FIRE ALARM RISER DIAGRAM

SCALE: NOT TO SCALE

SHEET NOTE:

POOL BUILDING IS MONITORED BY BUILDING 8. ANY STATUS CHANGES SHALL BE SENT TO MAIN CAMPUS SYSTEM THEN TO MOITORING COMPANY.

McCARTHY
LPA
KH

McCarthy Building Companies, Inc.
343 Sansome Street, 14th Floor
San Francisco, California 94104
P 415 | 364-1339
F 415 | 397-5999

Siemens Building Technologies, Inc.
Fire Safety Division
SAN FRANCISCO BRANCH
25821 Industrial Boulevard, Suite 300
Hayward, California 94545-2991
Tel (510) 783-6000 Fax (510) 293-2100
California State C10 License No. 758796
U.L. Certificate ID No. 324787-001

REGISTERED PROFESSIONAL ENGINEER
WILLIAM P. MAZZETTA
No. 13450
ELECTRICAL
STATE OF CALIFORNIA

IDENTIFICATION STAMP
DIV. OF THE STATE ARCHITECT
OFFICE OF REGULATION SERVICE
APPL. #: 01-110097
AC ___ FLS ___ SS D.M.
DATE APR 0 8 2009
FILE NUMBER:

This and all other project documents and all ideas, conceptions and designs incorporated herein are instruments of service. All rights in and to such instruments of service are the property of LPA, Inc. (LPA) and cannot be used or reproduced by any other person or for any project or purpose except as described in an executed agreement between McCarthy and the District. LPA hereby gives formal notice that any such project document use, reproduction or modification (misuse) is not only unlawful but automatically block all parties involved with misuse to fully indemnify and defend LPA and LPA's Consultants to the extent allowed by law against any claim, cost, expense or liabilities arising directly or indirectly from project document misuse. Project documents describe design intent of work and are not a representation of as-built or existing conditions. LPA and LPA's Consultants make no representations concerning the accuracy of documents and are not responsible for any discrepancies between project documents and the existing conditions.

© Copyright 2008

College of San Mateo
Site Package
San Mateo, CA

Developed for
San Mateo County Community College District

Revision	Description	Date

Revision	Description	Date
	DSA SUBMITTAL	19 SEPT 2008
	DSA FINAL	09 APRIL 2009

Job. No.	27082.30
Date	09 APRIL 2009
Drawn by	RB
Checked by	KR
Scale	AS SHOWN

POOL ROOM
FIRE ALARM
RISER DIAGRAM

FA06

L:\Eng_2\Current Projects\College of San Mateo-Pool Building_3000085\Incoming Files\YEAR 2009\Fire Alarm\CSM_POOL BLDG_FA_DSA FINAL_POOL BUILDING-REL.DWG - Apr 08, 2009 Wednesday - 10:10am - FA06-RIS - fferaren