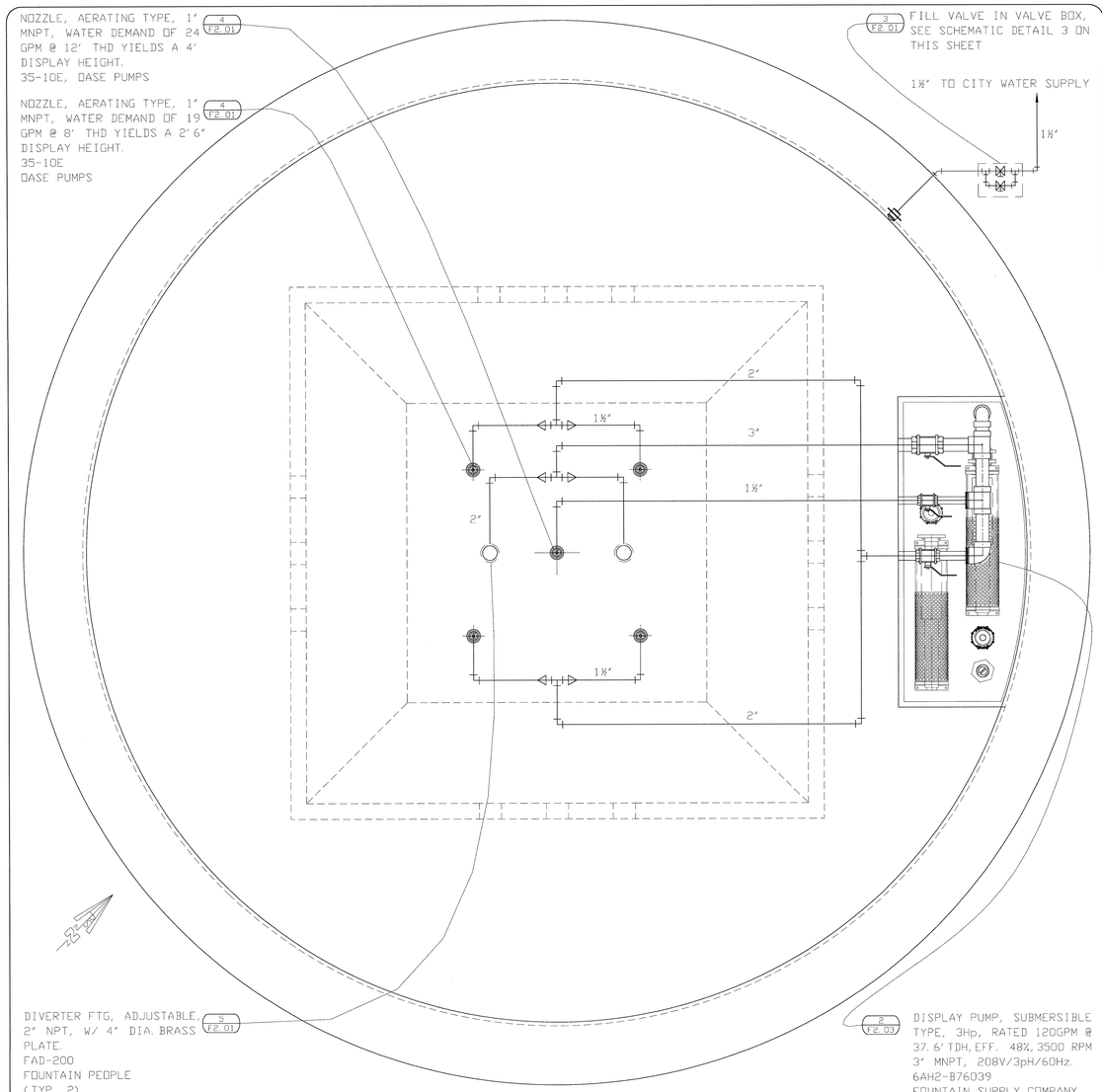

Fountain 3 Display ① Mechanical Plan
Scale: 3/4" = 1'-0"

NOTE:
WATER SUPPLY PIPING SHALL BE OF RED BRASS PIPE, NO PLASTIC IS ACCEPTABLE.

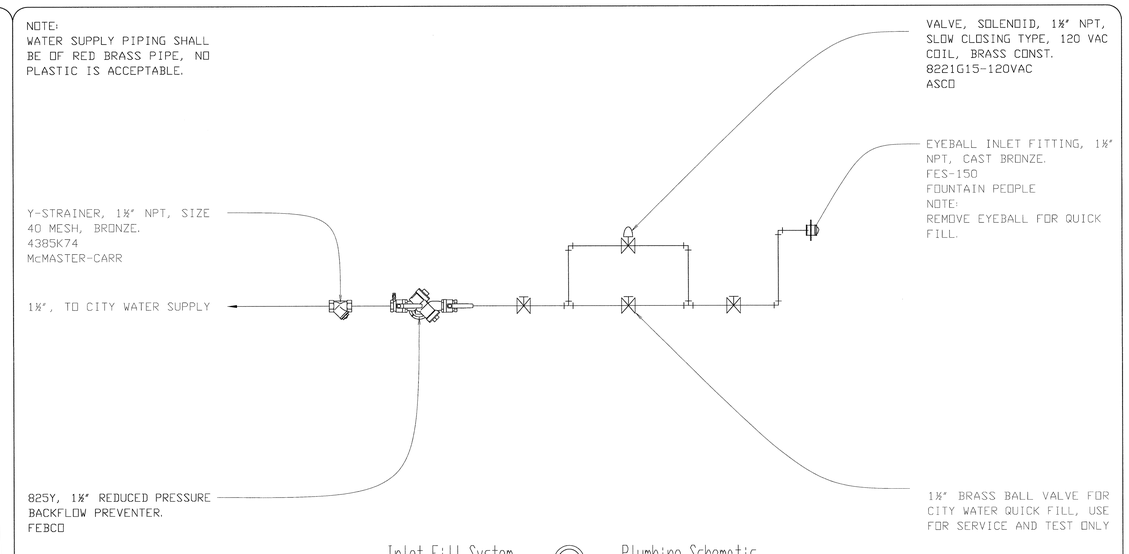

Inlet Fill System ③ Plumbing Schematic
Scale: None

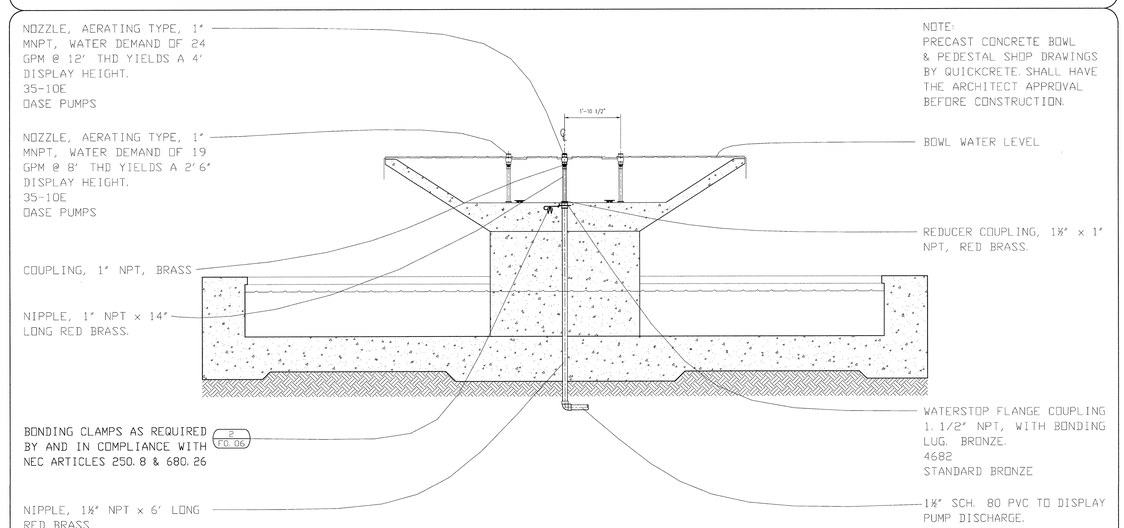

Sectiong thru Bowl ④ at Nozzle
Scale: 1/2" = 1'-0"

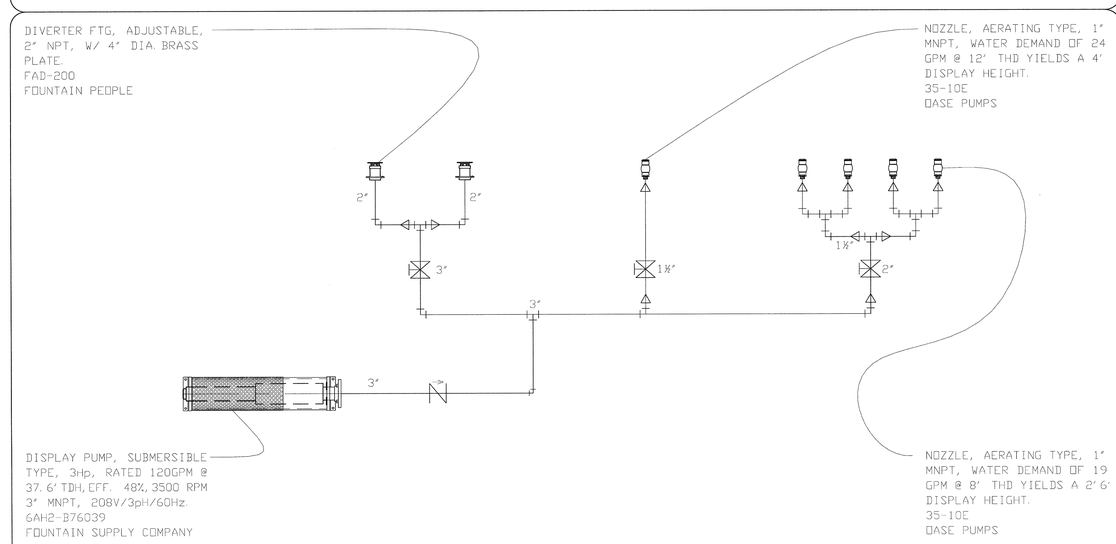

Fountain Display ② Piping Schematic
Scale: None

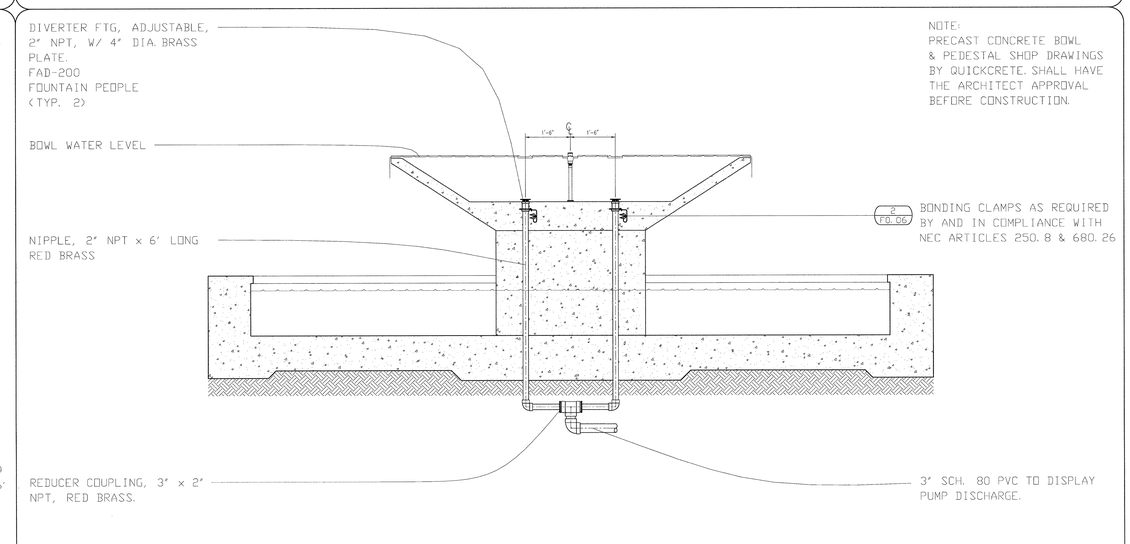

Sectiong thru Bowl ⑤ at Display Fitting
Scale: 1/2" = 1'-0"

McCARTHY LPA KH
McCarthy Building Companies, Inc
343 Sansome Street, 14th Floor
San Francisco, California 94104
P 415 |364-1339
F 415 |397-5999

REGISTERED PROFESSIONAL ENGINEER CHANG KIRKO No. 52191 Exp. 6/30/10 STRUCTURAL STATE OF CALIFORNIA

Formosa
Fountain & Engineering Company
412 E. Commonwealth Ave., Suite 1
Fullerton, Calif., 92832
Tel:(714)526-6606/Fax:(714)526-6616
www.formosafountains.com

This and all other project documents and all ideas, aesthetics and designs incorporated therein are instruments of service. All project documents are the registered property of LPA, INC. (LPA) and cannot be lawfully used in whole or in part for any project or purpose except as described in the contracted agreement between LPA and the Client. Client shall also be given formal notice that any such project document use, reproduction or modification (misuse) is not only unlawful but automatically binds all parties involved with misuse to fully indemnify and defend LPA and LPA's Consultants to the maximum legal extent against all losses, demands, claims or liabilities arising directly or indirectly from project document misuse. Project documents are instruments of service and are not a representation of as-built or existing conditions. LPA and LPA's Consultants make no representations concerning the accuracy of documents and are not responsible for any discrepancies between project documents and the existing conditions.

© Copyright 2008

IDENTIFICATION STAMP
DIVISION OF THE STATE ARCHITECT
APPL 01 110097
AC FLS DM SD.M.
DATE APR 09 2009

College of San Mateo
Site Package
San Mateo, CA

Developed for:
San Mateo County Community College District

Revision	Description	Date

Revision	Description	Date
	DSA SUBMITTAL	19 SEPT 2008
	DSA FINAL	09 APRIL 2009

Job. No.	27082.30
Date	09 APRIL 2009
Drawn by	VM
Checked by	LM
Scale	AS SHOWN

FOUNTAIN 3 MECHANICAL PLAN & DETAILS

F2.01