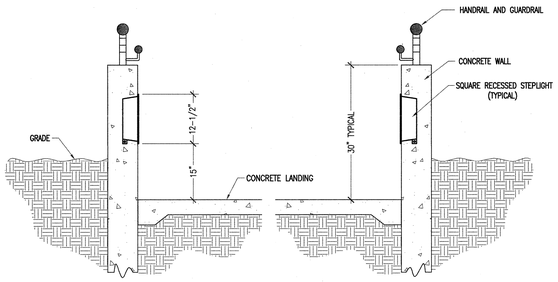

7 E0.04 **TYPE 'MM13' STEPLIGHT FIXTURES**
NO SCALE

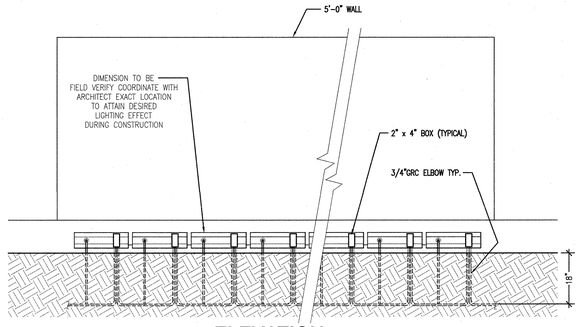

ELEVATION

8 E0.04 **TYPE 'MM14' WALLWASH FIXTURES**
NO SCALE

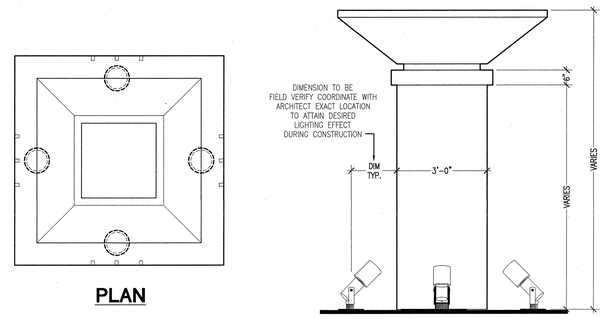

PLAN **ELEVATION**

9 E0.04 **TYPE 'MM15' UPLIGHT AT PILASTERS**
NO SCALE

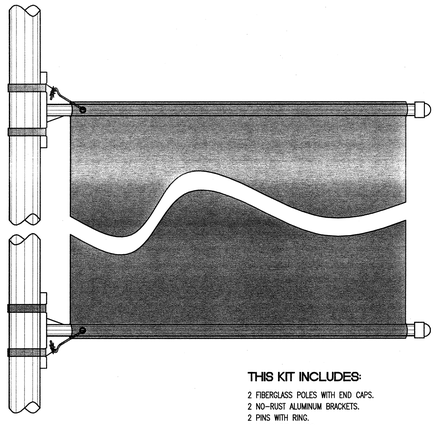

THIS KIT INCLUDES:
2 FIBERGLASS POLES WITH END CAPS.
2 NO-RUST ALUMINUM BRACKETS.
2 PINS WITH RING.
2 NYLON TIE WRAPS.
4 STAINLESS STEEL BANDS.

SINGLE BANNER
FURNISHED AND INSTALLED BY OTHERS

6 E0.04 **FIBERGLASS & ALUMINUM STREET POLE BRACKET**
NO SCALE

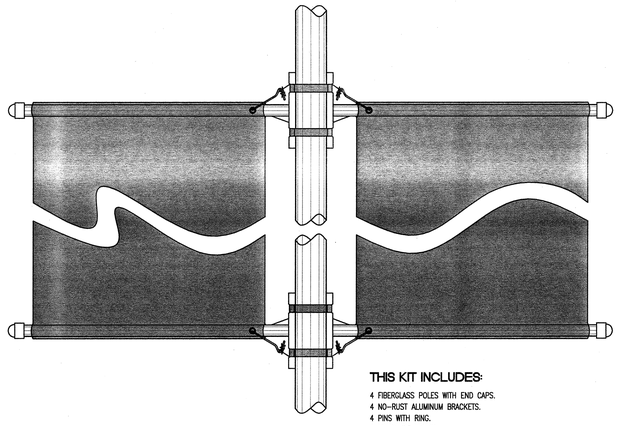

THIS KIT INCLUDES:
4 FIBERGLASS POLES WITH END CAPS.
4 NO-RUST ALUMINUM BRACKETS.
4 PINS WITH RING.
4 NYLON TIE WRAPS.
8 STAINLESS STEEL BANDS.

DOUBLE BANNERS
FURNISHED AND INSTALLED BY OTHERS

5 E0.04 **FIBERGLASS & ALUMINUM STREET POLE BRACKET**
NO SCALE

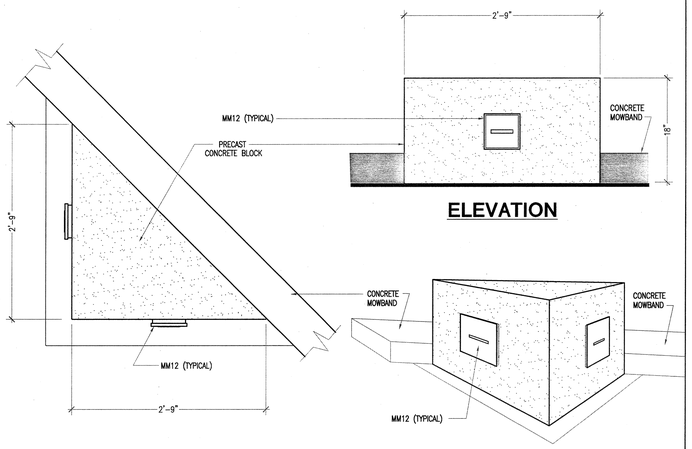

ELEVATION **PLAN** **PERSPECTIVE**

4 E0.04 **TYPE 'MM12' LED FIXTURE @ TRIANGULAR WALLS**
NO SCALE

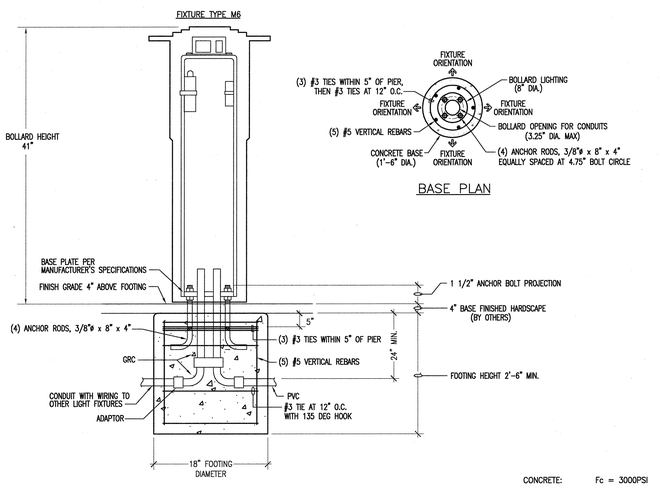

CONCRETE: Fc = 3000PSI
REINFORCEMENT: Fp = 40,000PSI

1 E0.04 **CONCRETE FOOTING DETAIL FOR BOLLARD LIGHT (M6)**
NO SCALE

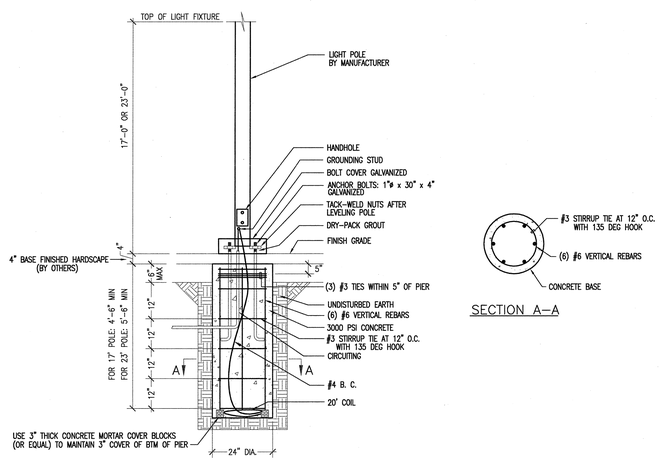

2 E0.04 **FLUSH POLE BASE DETAIL: 17'; 23' POLES**
NO SCALE

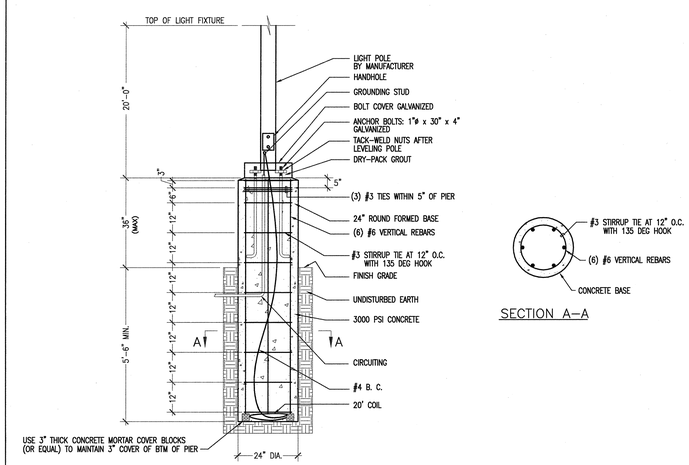

3 E0.04 **RAISED POLE BASE DETAIL: 20' POLES**
NO SCALE

RText (RText)

McCarthy
LPA
KH

McCarthy Building Companies, Inc.
343 Sansome Street, 14th Floor
San Francisco, California 94104
P 415 | 364-1339
F 415 | 397-5999

BUILDING QUALITY... BUILDING VALUE BUILDING PEOPLE
ROSENDIN ELECTRIC
www.rosendin.com
CORPORATE HEADQUARTERS: SAN JOSE, CA (408) 286-2800
SAN JOSE ENGINEERING: 2500 Technel Plaza San Jose, CA 95134 (408) 286-2800
Arizona California Nevada New Mexico Oregon

REGISTERED PROFESSIONAL ENGINEER
WILLIAM P. MAZZEI
No. 15450
Exp. 12/30/10
ELECTRICAL
STATE OF CALIFORNIA

IDENTIFICATION STAMP
DIV. OF THE STATE ARCHITECT
OFFICE OF REGULATION SERVICE
APPL. # 01-110097
AC. FLS DSA SS/CC
DATE APR 09 2009

FILE NUMBER:

The and all other project documents and all ideas, sketches, and designs incorporated herein are instruments of service. All of the documents are the exclusive property of LPA, Inc. (LPA) and cannot be used in general or for any other project or purpose except as described in the executed agreement between McCarthy and the District. LPA hereby gives formal notice that any such project document use, reproduction or modification (misuse) is not only unlawful but automatically binds all parties involved with misuse to fully indemnify and defend LPA and LPA's Consultants to the maximum extent of the law against any claims, damages or liabilities arising directly or indirectly from project document misuse. Project documents describe design intent of work and are not a representation of as-built or existing conditions. LPA and LPA's Consultants make no representations concerning the accuracy of documents and are not responsible for any discrepancies between project documents and the existing conditions.

© Copyright 2008

College of San Mateo
Site Package
San Mateo, CA

Developed for
San Mateo County Community College District

Revision	Description	Date

Revision	Description	Date
	DSA SUBMITTAL	19 SEPT 2008
	DSA FINAL	09 APRIL 2009

Job. No.	300085
Date	09 APRIL 2009
Drawn by	REI CAD TEAM
Checked by	TH/SF/RW
Scale	AS SHOWN

Electrical Details

E0.04