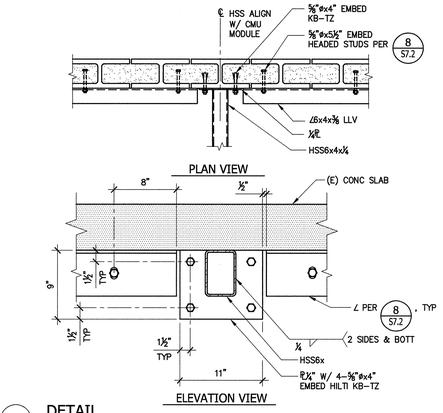

17 DETAIL
BLDG 16
Scale: NTS

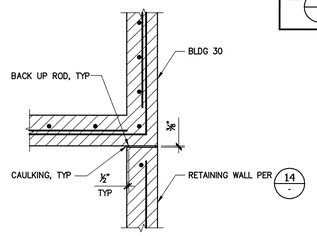

NOTE:
FOR ITEMS NOT SHOWN OR NOTED, SEE 2

13 WALL CONTROL JOINT
BLDG 30
Scale: NTS

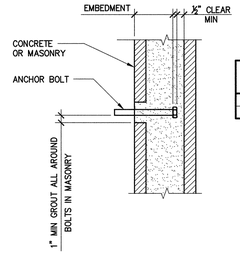

BOLT SIZE	MIN EMBEDMENT UON
½"	4"
⅝"	5½"

9 BOLT EMBEDMENT SCHEDULE
Scale: NTS

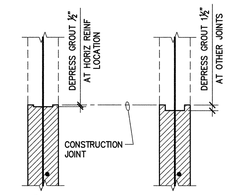

NOTE:
PROVIDE 1" MIN GROUT COVER OVER REINF

A HORIZONTAL CONSTRUCTION JOINTS

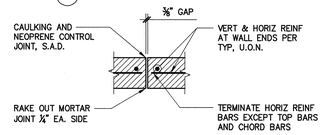

B VERTICAL CONTROL JOINTS

5 GROUT CONSTRUCTION AND CONTROL JOINTS
Scale: NTS

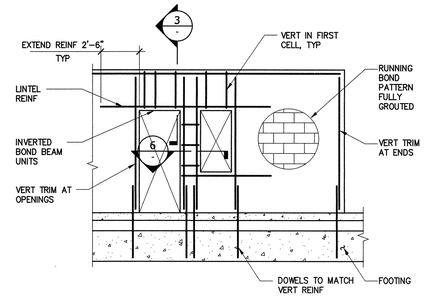

NOTES:
1. TRIM BARS ARE 2-#5 UON. EXTEND TRIM BARS FULL HEIGHT OF WALL.
2. LAP REINF 48 BAR DIA.

1 CMU WALL FRAMING
Scale: NTS

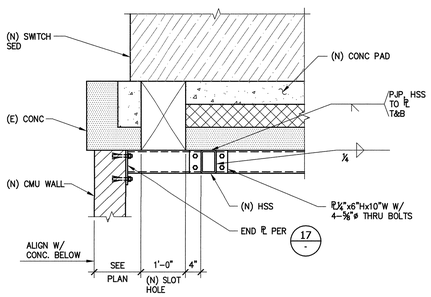

18 SECTION
BLDG 16
Scale: NTS

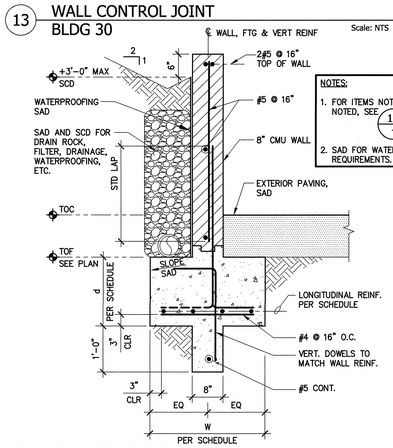

NOTES:
1. FOR ITEMS NOT SHOWN OR NOTED, SEE 10
2. SAD FOR WATERPROOFING REQUIREMENTS.

14 CMU RETAINING WALL
BLDG 30
Scale: NTS

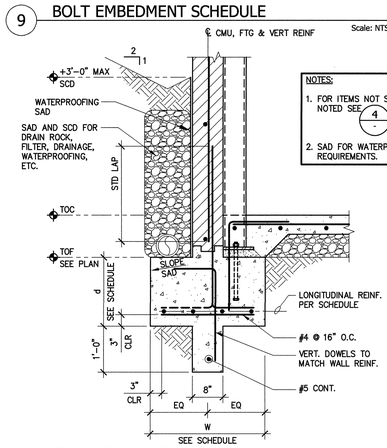

NOTES:
1. FOR ITEMS NOT SHOWN OR NOTED SEE 4 & 11
2. SAD FOR WATERPROOFING REQUIREMENTS.

10 CMU RETAINING WALL
AT EXTERIOR WALL BLDG 30
Scale: NTS

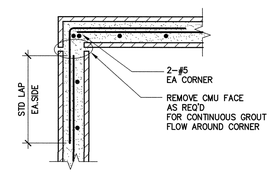

2 CMU WALL INTERSECTIONS AND ENDS
Scale: NTS

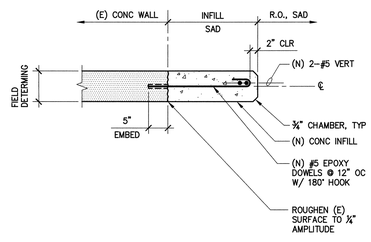

15 INFILL DETAIL
BLDG 16
Scale: NTS

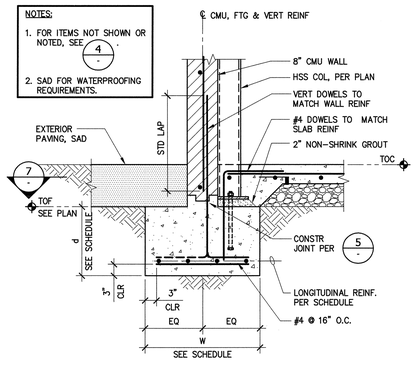

11 EXTERIOR 8" CMU WALL FOOTING
BLDG 30
Scale: NTS

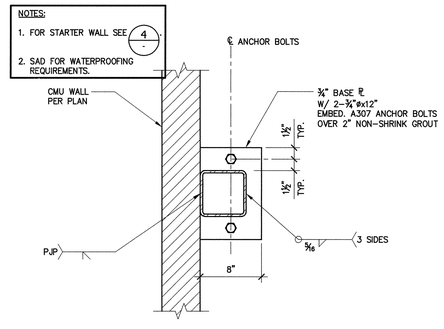

7 BASE PLATE DETAIL
BLDG 30
Scale: 1 1/2"=1'-0"

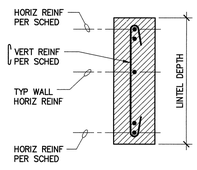

REINFORCING SCHEDULE FOR LINTEL CMU WALL			
OPENING LENGTH	MIN LINTEL DEPTH	8" WALL	
		HORIZ	VERT
6'-8"	2'-0"	2-#6	#4 @ 8" o.c.

3 8" CMU LINTEL DETAIL
Scale: 3/4"=1'-0"

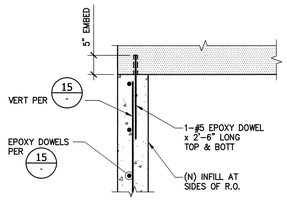

16 INFILL DETAIL
BLDG 16
Scale: NTS

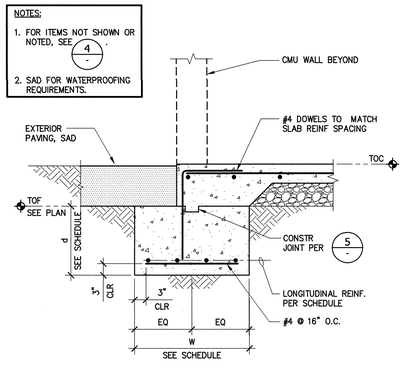

12 EXTERIOR FOOTING AT OPENING
BLDG 30
Scale: NTS

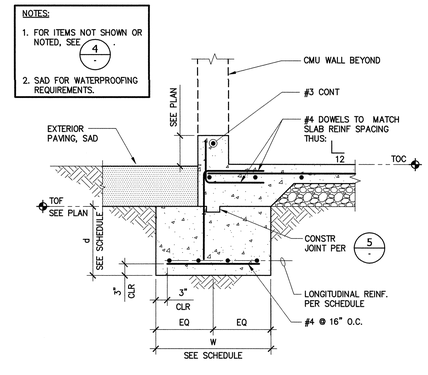

8 EXTERIOR FOOTING AT OPENING W/ CURB
BLDG 30
Scale: NTS

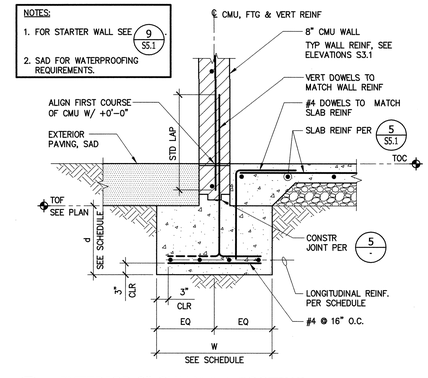

4 EXTERIOR 8" CMU WALL FOOTING
BLDG 30
Scale: NTS

noll & tam
architects and planners
729 Heinz Avenue
Berkeley, CA 94710
510.649.8295
fax 510.649.3008

KPW
KILAND + PASSAGLIA + WESTPHAL
STRUCTURAL ENGINEERS, INC
130 WEBSTER STREET
SUITE 200
OAKLAND, CA 94607
V. 510 208-3300
F. 510 208-3303
WWW.KPWSE.COM

IDENTIFICATION STAMP
DIVISION OF THE STATE ARCHITECT
APPLICATION NUMBER 01: 111618
AC — FLS — SE
DATE 2/9/11

CALIFORNIA STATE FIRE MARSHAL APPROVED
APPROVAL OF THIS PLAN DOES NOT AUTHORIZE OR APPROVE ANY OMISSION OR DEVIATION FROM APPLICABLE REGULATIONS. FINAL APPROVAL IS SUBJECT TO FIELD INSPECTION. ONE SET OF APPROVED PLANS SHALL BE AVAILABLE ON THE PROJECT SITE AT ALL TIMES.
REVIEWED BY: _____ DATE: _____

CAÑADA COLLEGE
Electrical Infrastructure Replacement Project
4200 Farm Hill Blvd
Redwood City, CA 94061

REGISTERED PROFESSIONAL ENGINEER
JOHN K. WESTPHAL
No. 4575
Exp. 6-30-11
STRUCTURAL
STATE OF CALIFORNIA

BID SET

SHEET TITLE
DETAILS

REVISIONS

NO.	DATE	DESCRIPTION

DATE	January 14, 2011
DRAWN	PIL
CHECKED	JKW
SCALE	
JOB NO.	2921.01

SHEET NUMBER
S5.3

L:\CAD Files\Projects\2010 Projects\10C110\Struct\10C110-S5.3.dwg Jan 25, 2011 - 4:02pm Kristy